STAR-Dundee

ESA LVDS Workshop

Experience with LVDS and SpaceWire Physical Layer Tester

Steve Parkes & Pete Scott

STAR-Dundee

© STAR-Dundee Ltd 2011

© STAR-Dundee Ltd 2011

Grounding

- Make sure the ground is connected
  - Maximum common mode voltage is very low
- If you do not ground the systems first
  - Can easily exceed the maximum input voltage for LVDS buffer or interface chip
- This is a common mistake with LVDS and SpaceWire

© STAR-Dundee Ltd 2011

Single Point Ground

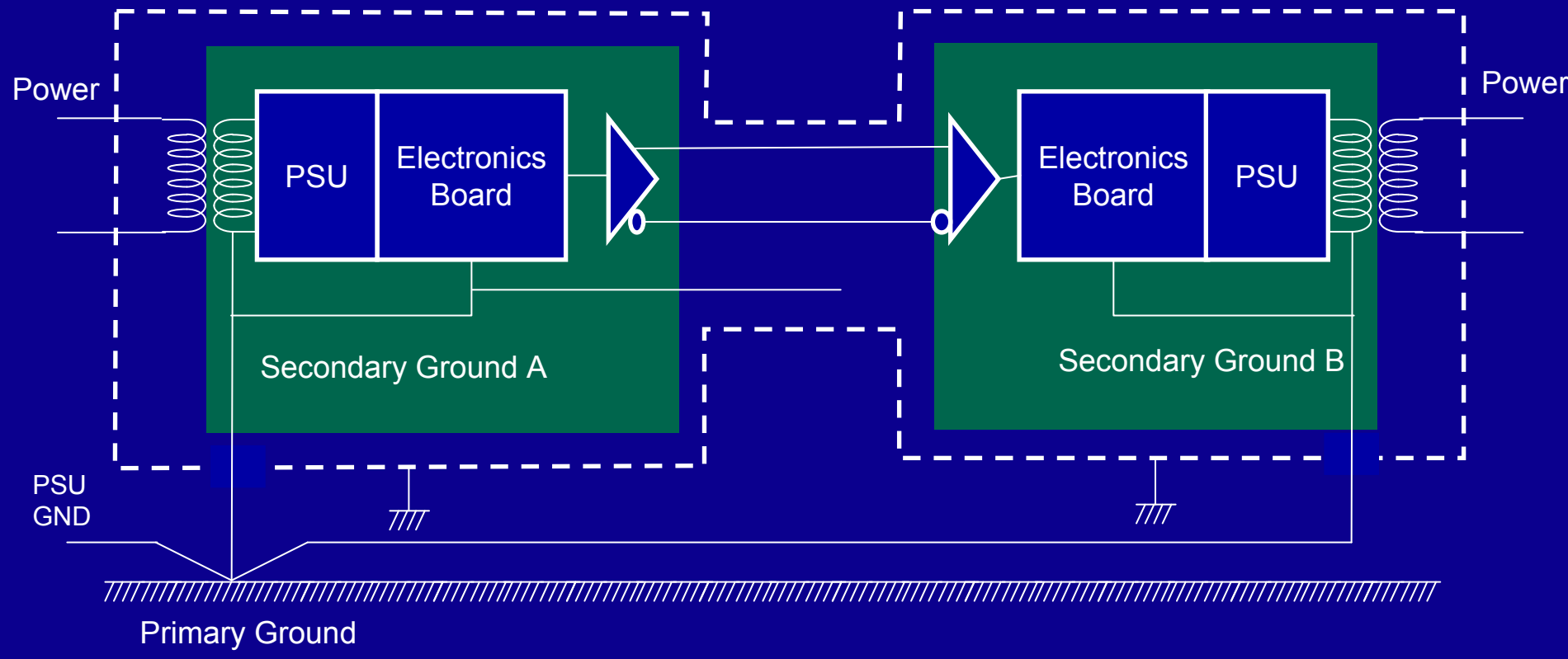

Now forbidden in spacecraft

© STAR-Dundee Ltd 2011

Multi-Point, Single Reference Gnd

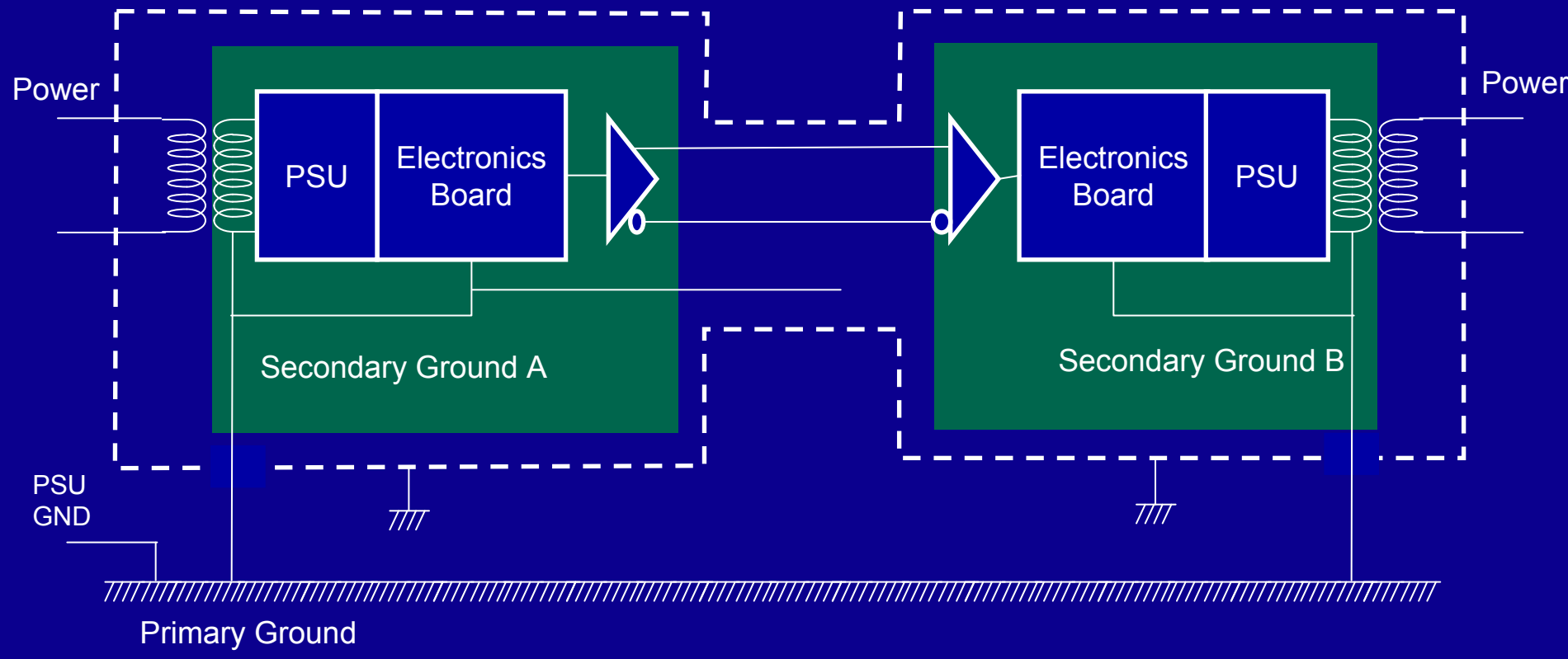

© STAR-Dundee Ltd 2011

Multi-Point Ground - Recommended

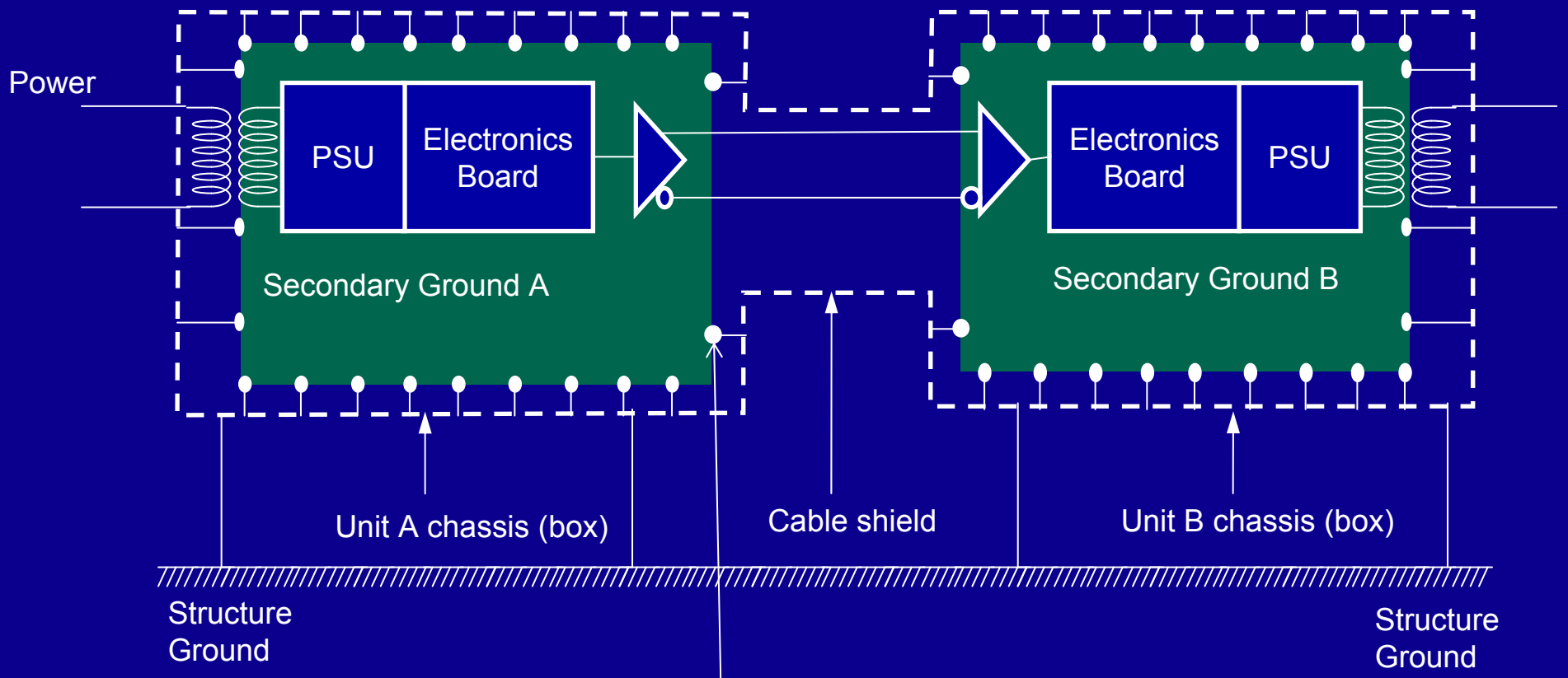

This is the most important connection
To minimise common mode voltage between units
Have direct connection from back shell to PCB GND
If still a problem fit an external common mode choke i.e. ferrite
For LVDS signals can add a common mode choke
Current specifications of spacecraft do not guarantee multi-point PCB to box connection

© STAR-Dundee Ltd 2011

Signal Integrity

- Take care with the LVDS signals
  - 100 ohm differential impedance
    - Tracks
    - Wires
- Worry about signal integrity at all levels
- Will ensure that SpaceWire works with no problem

© STAR-Dundee Ltd 2011

PCB Traces

- Avoid right-angle turns
- Avoid skew between
  - LVDS plus
  - LVDS minus
- Avoid skew between
  - Data
  - Strobe
- Match track lengths

© STAR-Dundee Ltd 2011

PCB Traces – Rules of Thumb

- 200 MHz is 5 ns bit interval
- Edges about 10 x bit interval
  - i.e. 0.5 ns
- FR4 PCB
  - Signals travel at around 100 mm per ns
  - 0.5 ns is thus 50 mm
  - Any impedance discontinuity significantly less than 50 mm will not be seen by signal
- Connectors
  - Not impedance matched
  - Keep leads short
  - Twist leads together in pairs

© STAR-Dundee Ltd 2011

PCB Traces – Rules of Thumb

- To avoid jitter
  - Keep LVDS + and LVDS – same lengths
  - Mismatch will directly translate to jitter
  - Try to match track lengths all the way along the track
    - i.e. do NOT make one track shorter at one end and then longer at other end

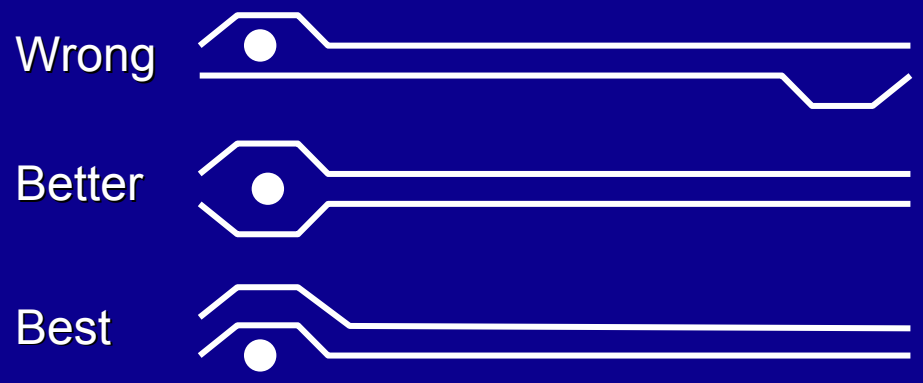

- To avoid skew
  - Keep Data and Strobe signals the same length
  - Mismatch will directly translate to skew
  - Skew budget for PCB < 0.1 ns
  - Keep tracks same length within a few mm
  - Easy to do

© STAR-Dundee Ltd 2011

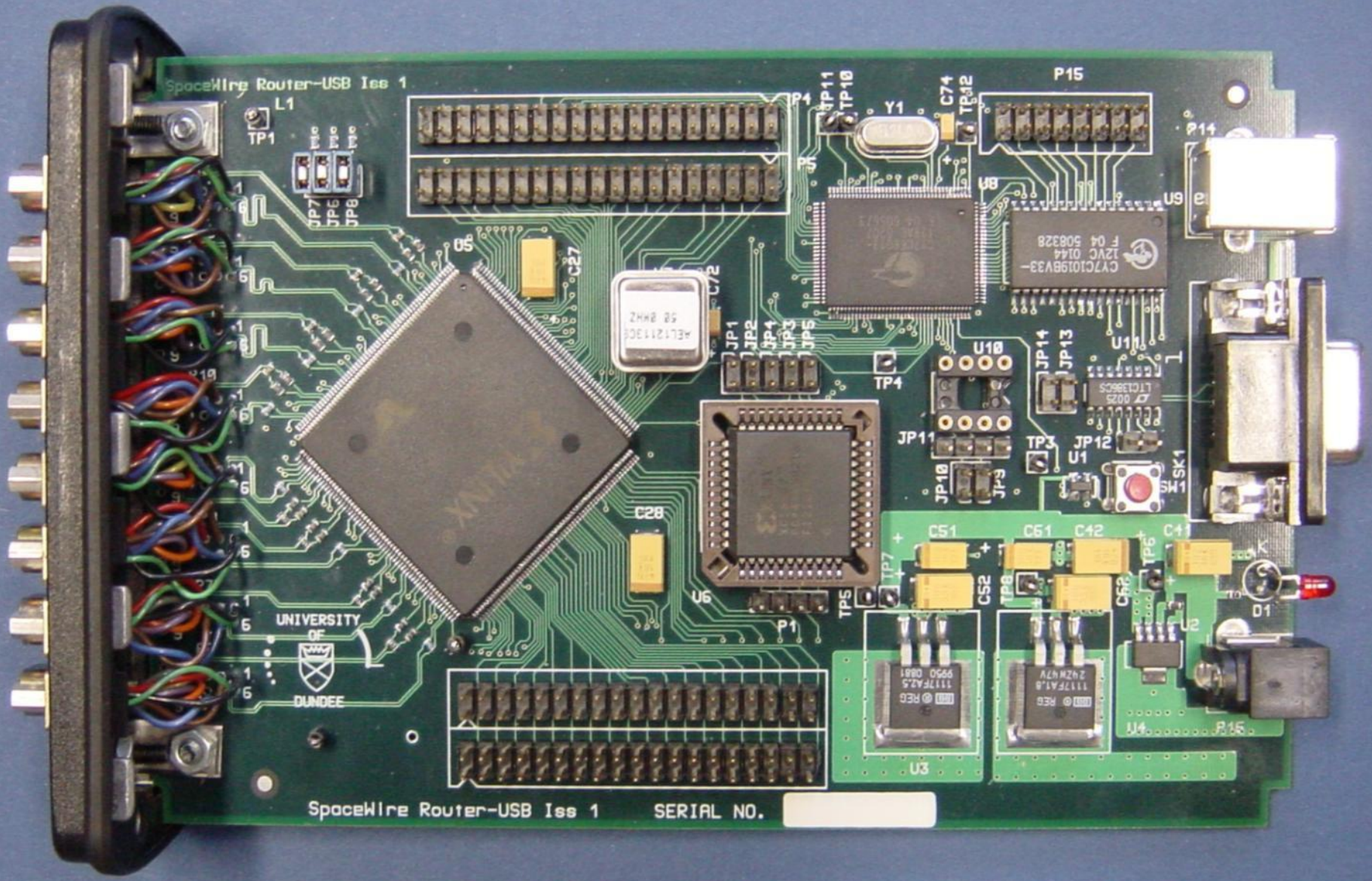
SpaceWire Router-USB Iss 1
SpaceWire Router-USB Iss 1 SERIAL NO.
UNIVERSITY OF DUNDEE
XILINX
P15
P14
P4
P1
Y1
U5
U6
U8
U9
U10
U11
U1
U2
U3
U4
D1
SK1
SW1
TP1
TP3
TP4
TP5
TP6
TP7
TP8
TP10
TP11
TP12
JP1
JP2
JP3
JP4
JP5
JP9
JP10
JP11
JP12
JP13
JP14
C27
C28
C51
C61
C42
C41
C52
C62
C74
L1

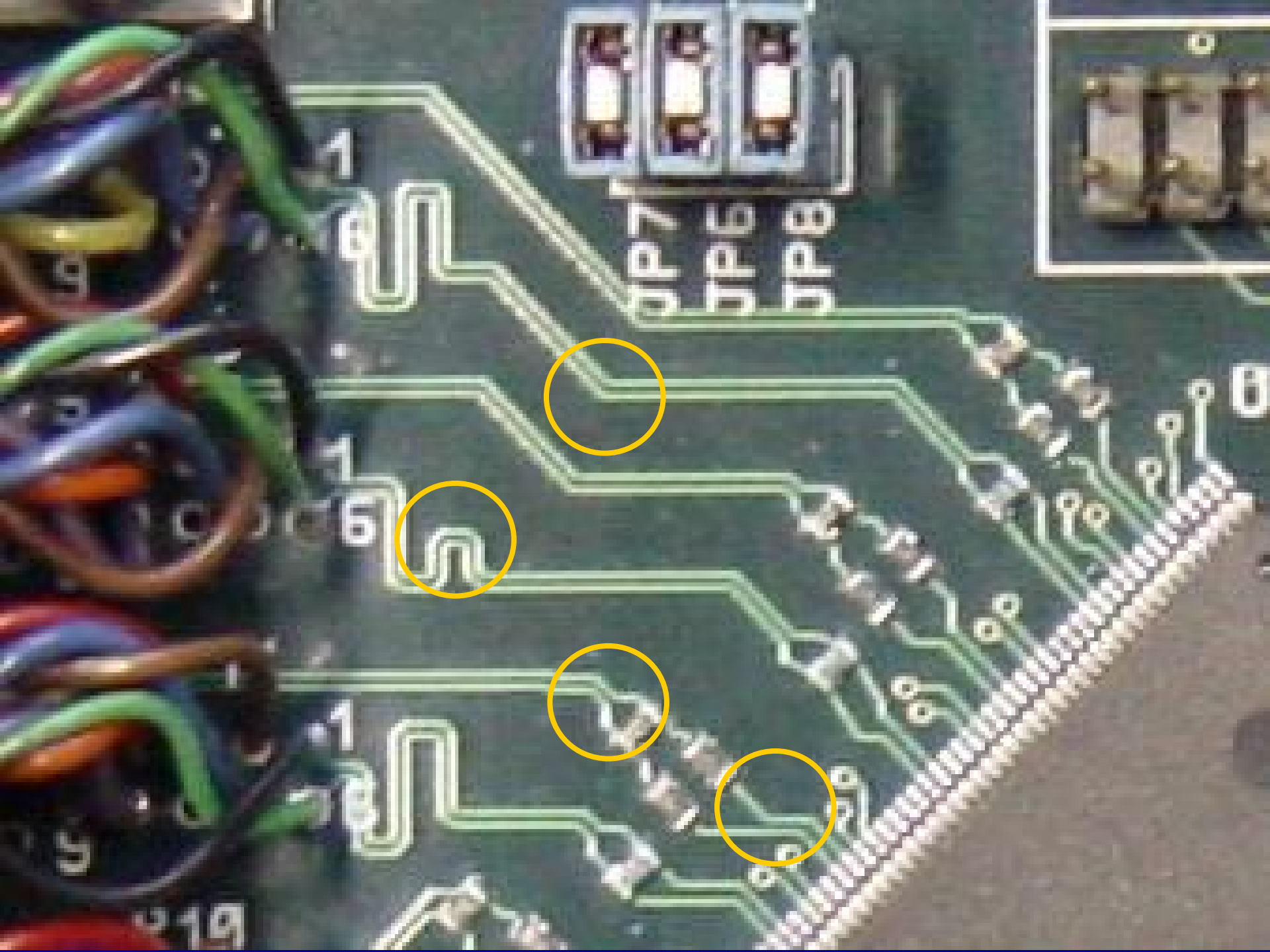

LVDS Tracking

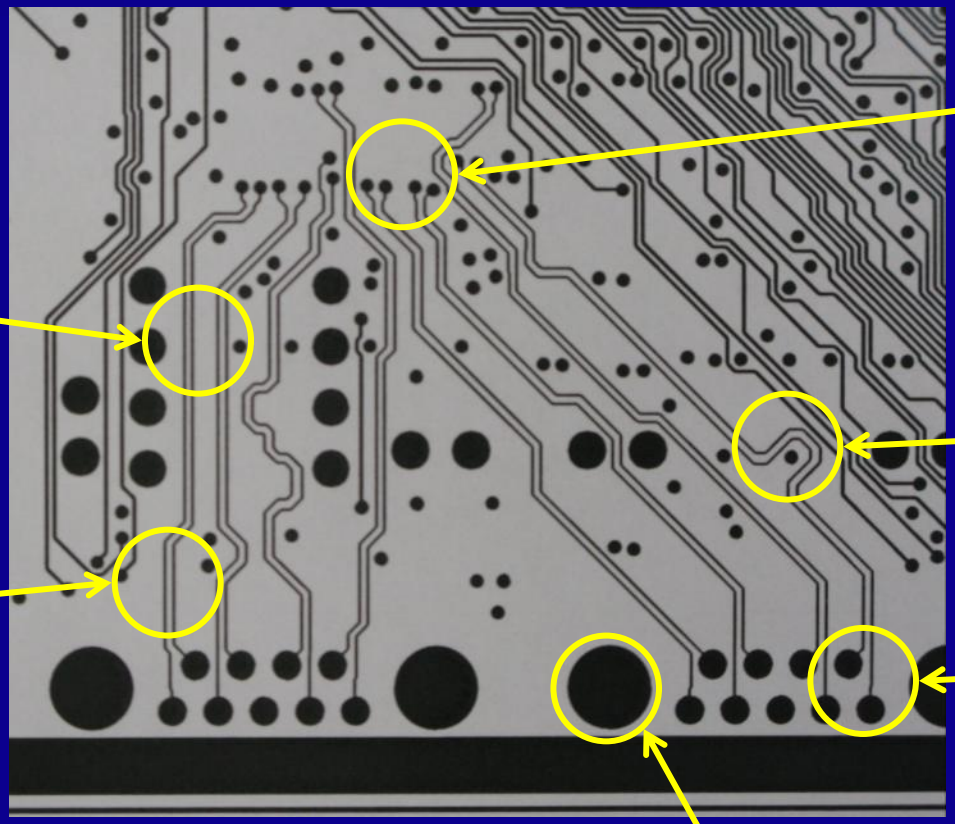

Minimise number of vias

Clear space between tracks

Match track lengths for D and S

100 ohm differential impedance

Match in pair track lengths

Direct connection of backshell to ground

Simple, good practice for high-speed signals

© STAR-Dundee Ltd 2011

What to do

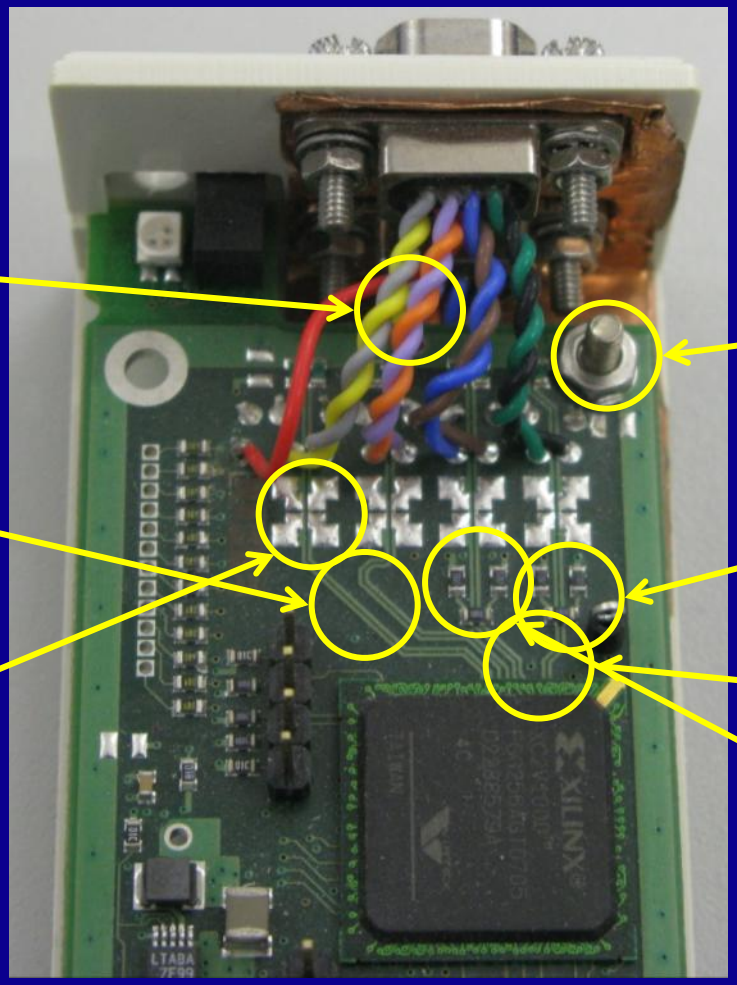

Flying leads to connector are twisted

LVDS tracks

Pads for common mode chokes

Ground connection

Termination resistors close to chip

Vias at chip

Bias resistor network

© STAR-Dundee Ltd 2011

What to do

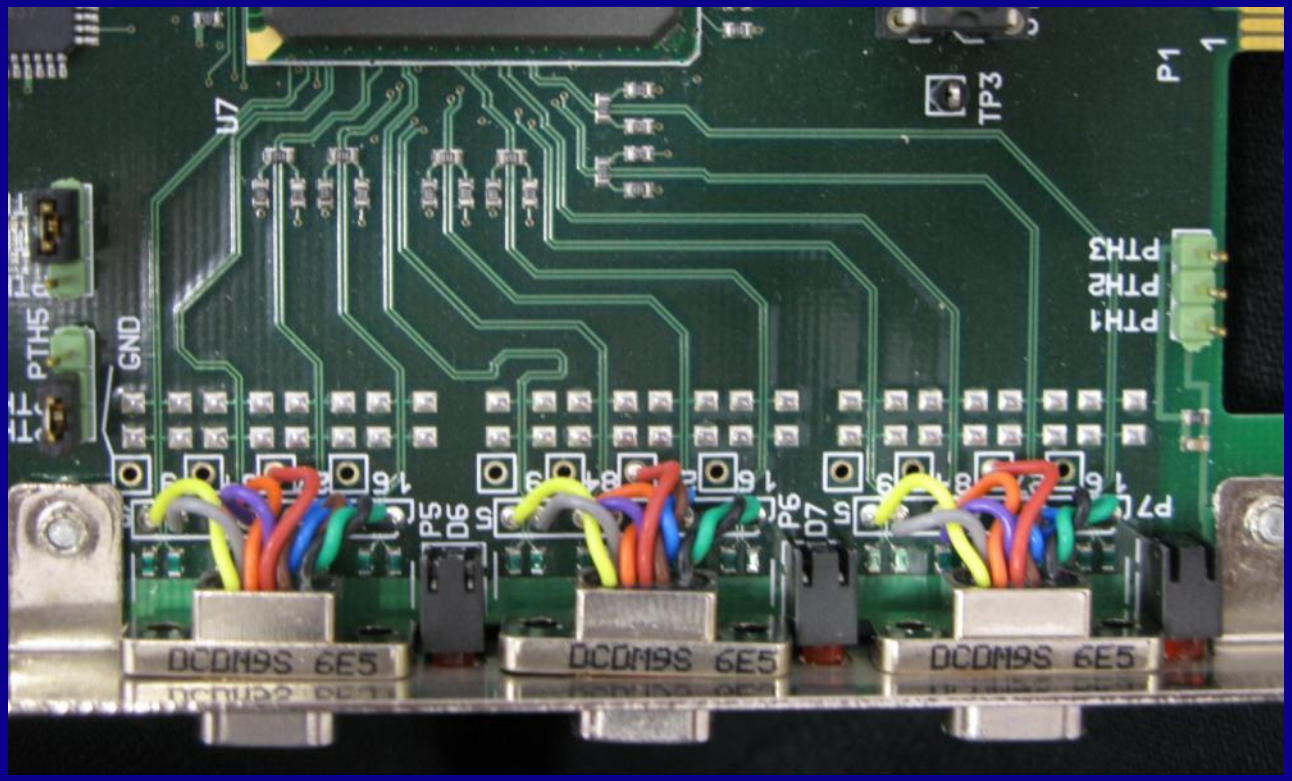

© STAR-Dundee Ltd 2011

Cable Assembly

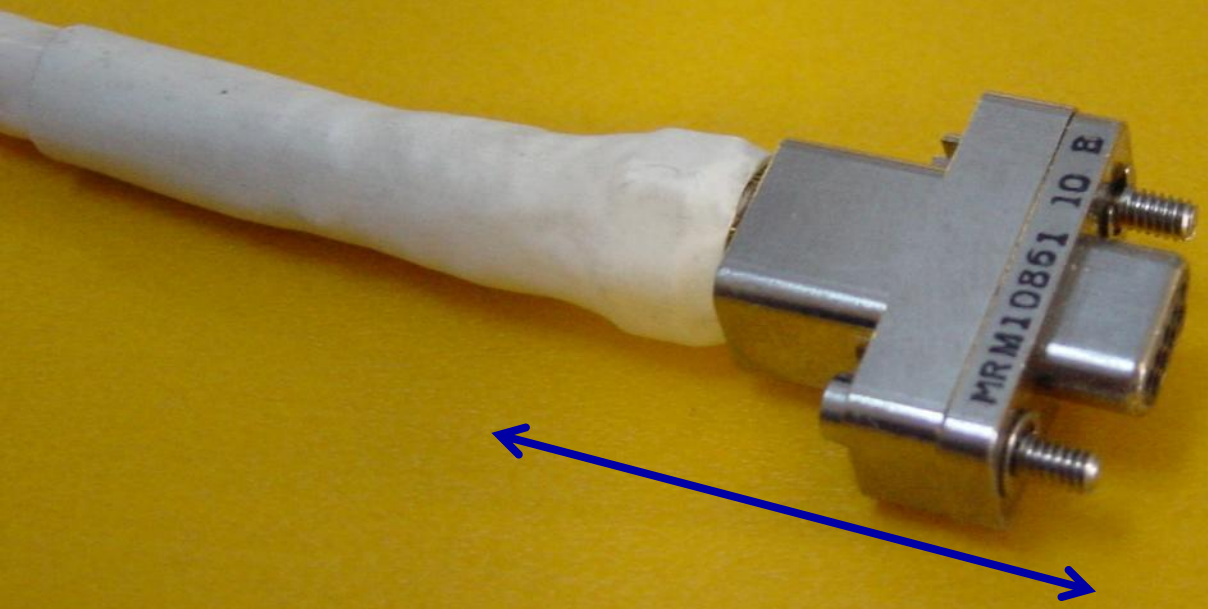

What not to do

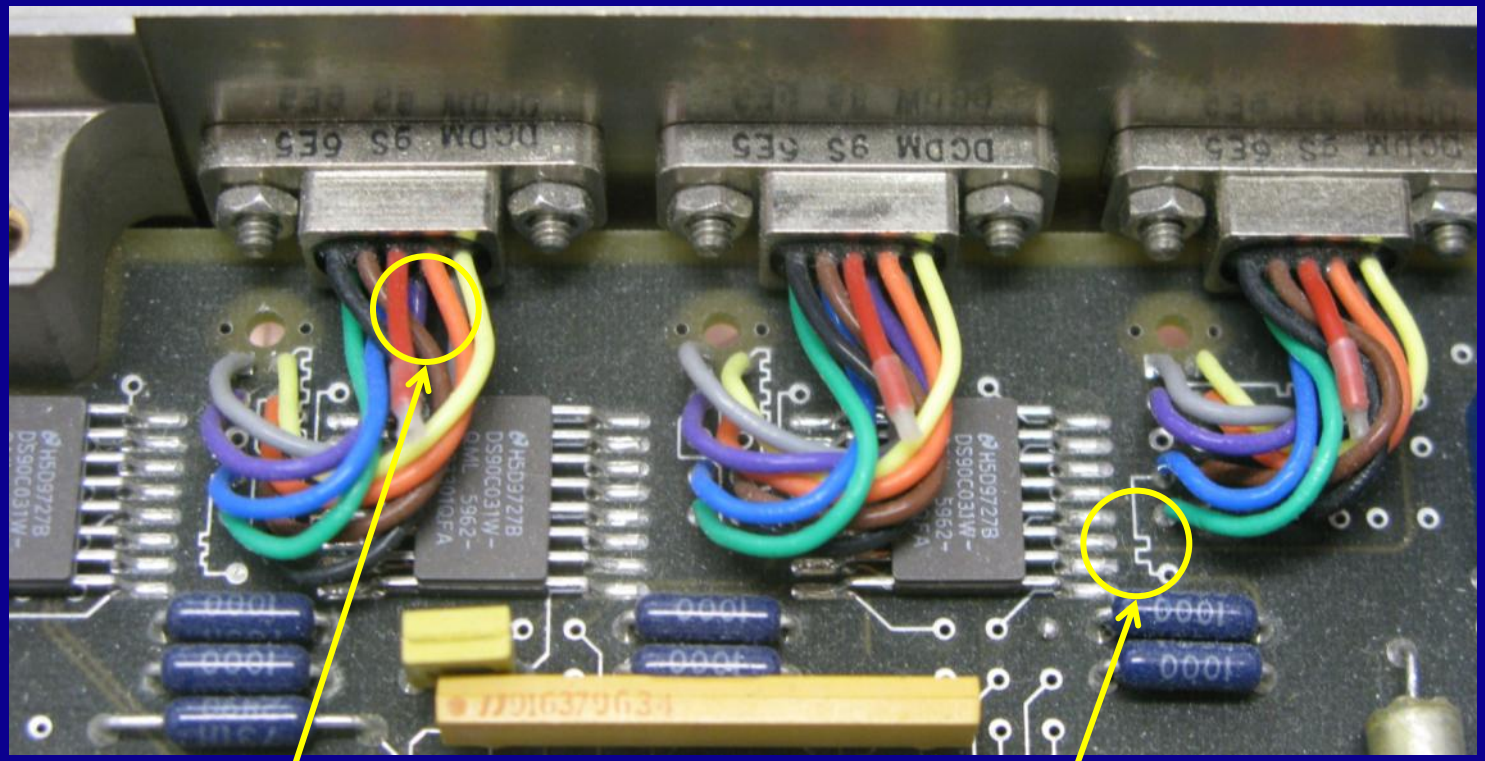

Pairs not twisted and are too long

Tracks not 100 ohm differential

© STAR-Dundee Ltd 2011

When all else fails

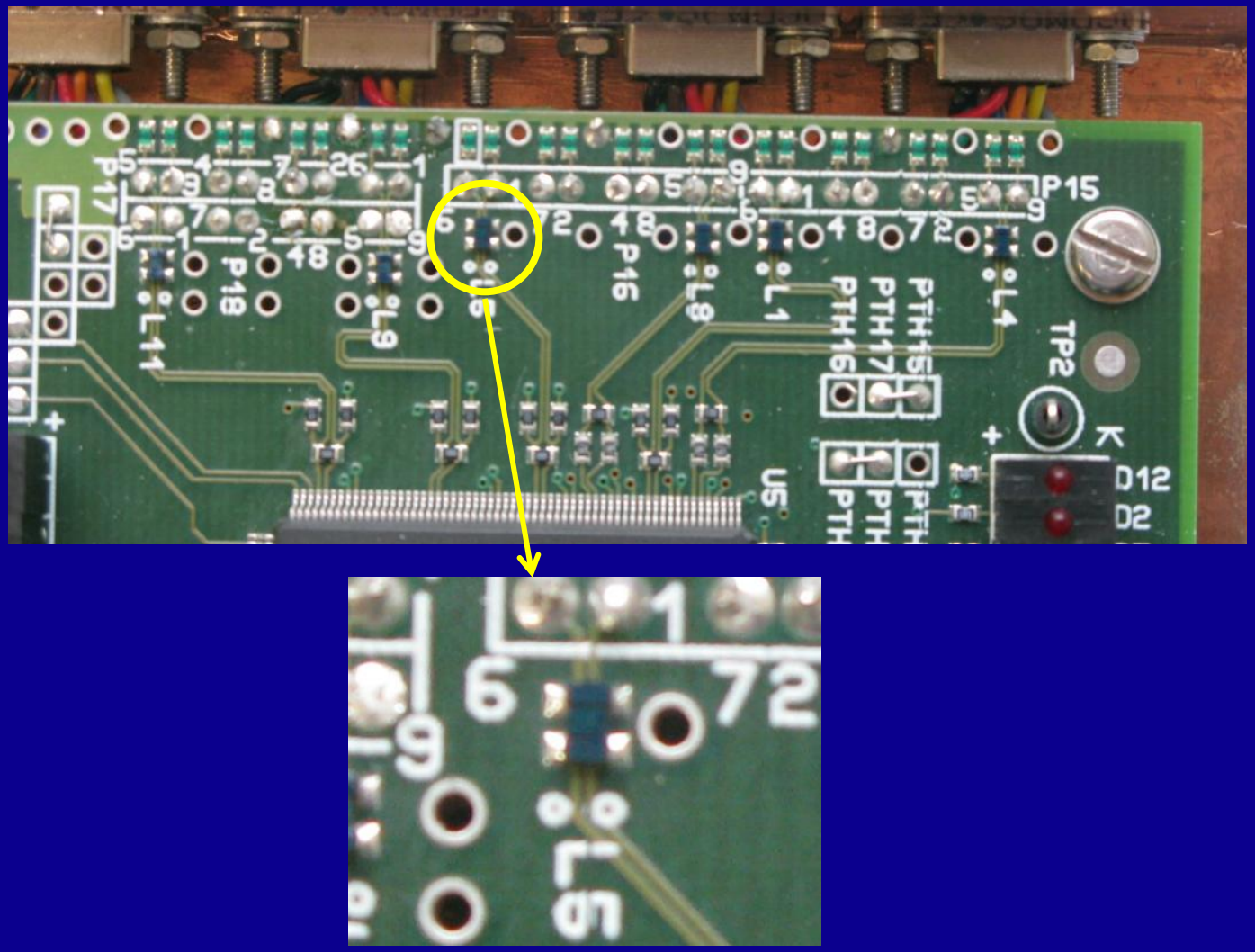

© STAR-Dundee Ltd 2011

Failsafe operation of LVDS

- When any of the following fault conditions occur, the receiver outputs shall not oscillate and shall be locked to high logic level provided that a noise threshold of 10 mV is not exceeded at the receiver input.
  - Driver not powered.
  - Driver disabled.
  - Driver not connected to receiver.
  - Receiver inputs open circuit (i.e. cable or wire in cable disconnected).
  - Receiver inputs shorted together.
- When the driver is not powered its output should be high impedance
  - i.e. > 100 kΩ.
- When the receiver is not powered its input should be high impedance
  - i.e. > 100 kΩ.

© STAR-Dundee Ltd 2011

Receiver Input Impedance

- 100 kohms specified in the standard
- Actually
  - A guide – want a relatively high input impedance
  - Did not take into account the bias resistors
    - Typically of around 10 kohms

© STAR-Dundee Ltd 2011

Bias Resistor Network

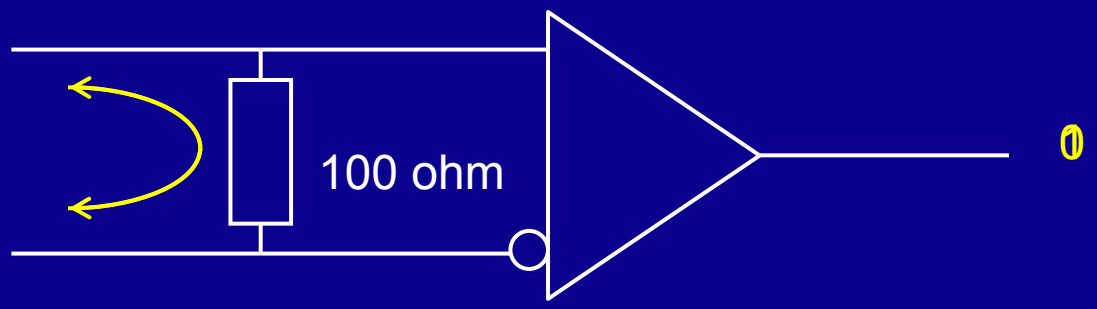

© STAR-Dundee Ltd 2011

Bias Resistor Network

Disconnected
Receiver Input

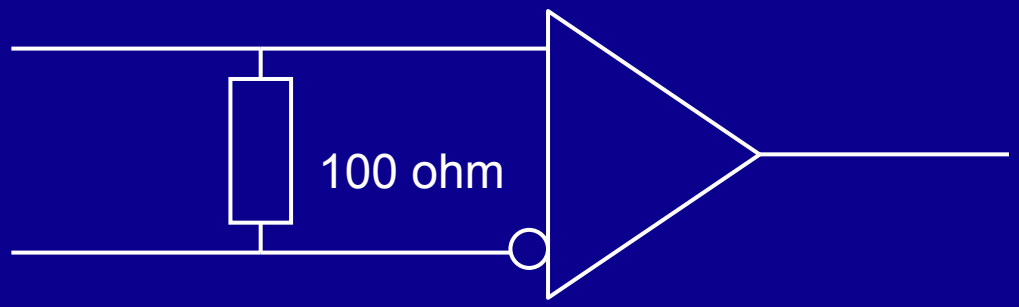

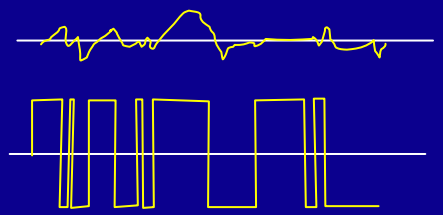

© STAR-Dundee Ltd 2011

Bias Resistor Network

Disconnected
Receiver Input

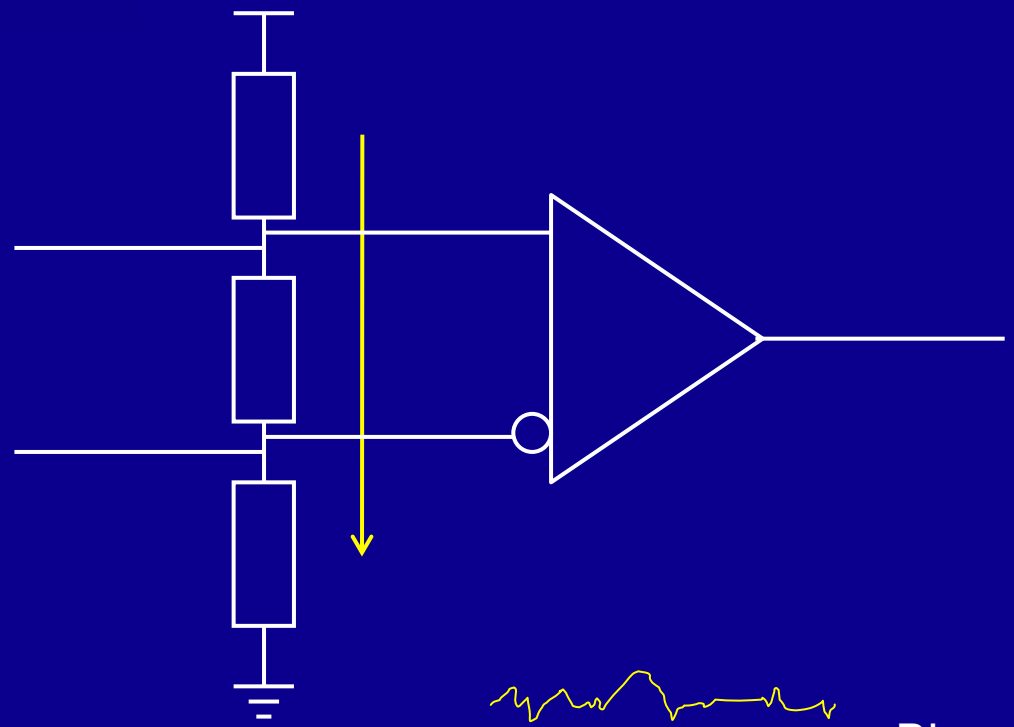

Biased threshold

Receiver output high

© STAR-Dundee Ltd 2011

ESD

- Take ESD precautions
  - Although I think most damage is cause by incorrect grounding
  - Or inadvertently putting a “high” voltage down the line…
- External ESD diodes straight to chassis
  - Not via the ground plane on the board
  - Unless unavoidable (which is never)

© STAR-Dundee Ltd 2011

What to do

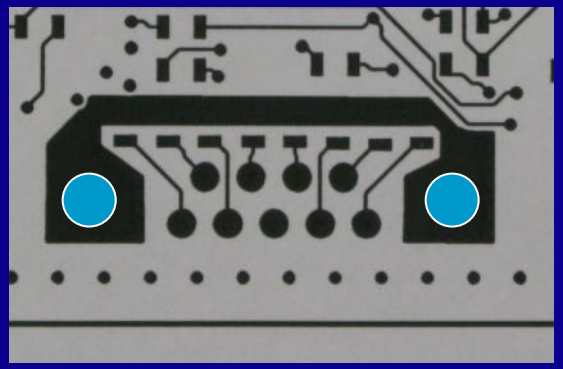

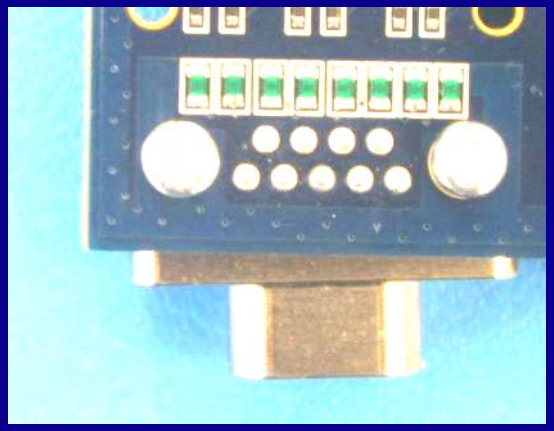

© STAR-Dundee Ltd 2011

SpaceWire Physical Layer Tester

- Aims
  - To be able to test the physical layer (LVDS) of a SpaceWire unit without opening the box.
  - Putting a high-speed oscilloscope across the termination resistor NOT possible.
- How fast an oscilloscope?
  - 200 Mbits/s = 100 MHz signal
  - For eye pattern need to capture the dip in the middle of the eye
  - Need 3rd and 5th harmonic i.e. 500 MHz B/W (>2 Gsps)
  - If you want to see the rising edge 10x signal frequency

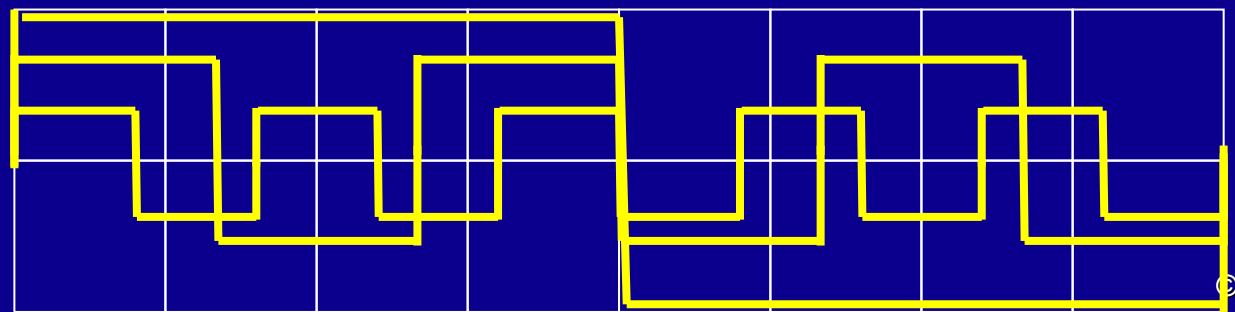

© STAR-Dundee Ltd 2011

Eye Pattern

- Best way of measuring LVDS signal integrity is by looking at the eye pattern across the termination resistor
- Need wide-bandwidth oscilloscope
- Need wide-bandwidth differential probes
- Need to open up the unit under test

- Since data is relative to strobe use strobe to trigger oscilloscope

© STAR-Dundee Ltd 2011

Router-USB: 200 Mbps, 10 m

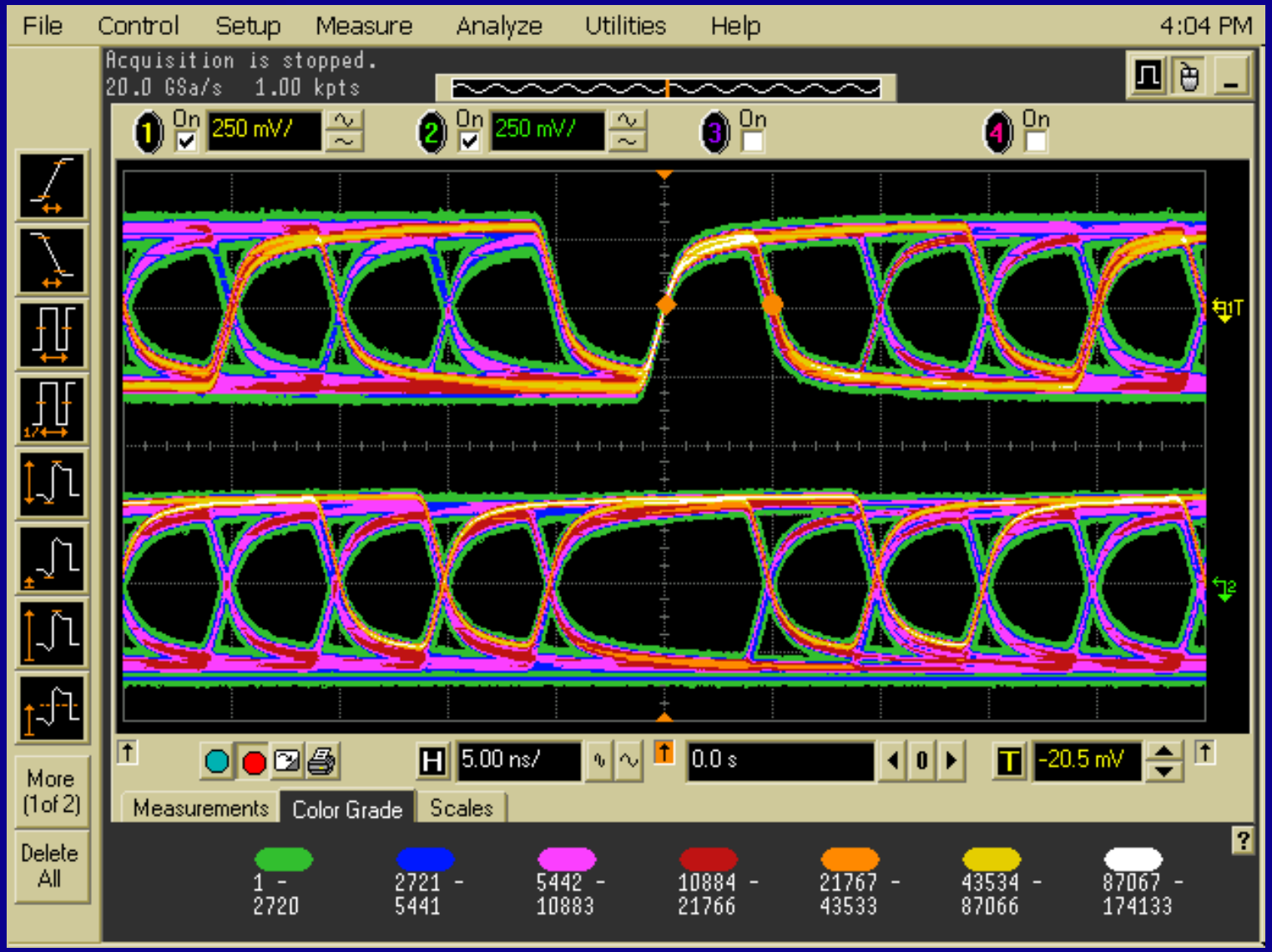

© STAR-Dundee Ltd 2011

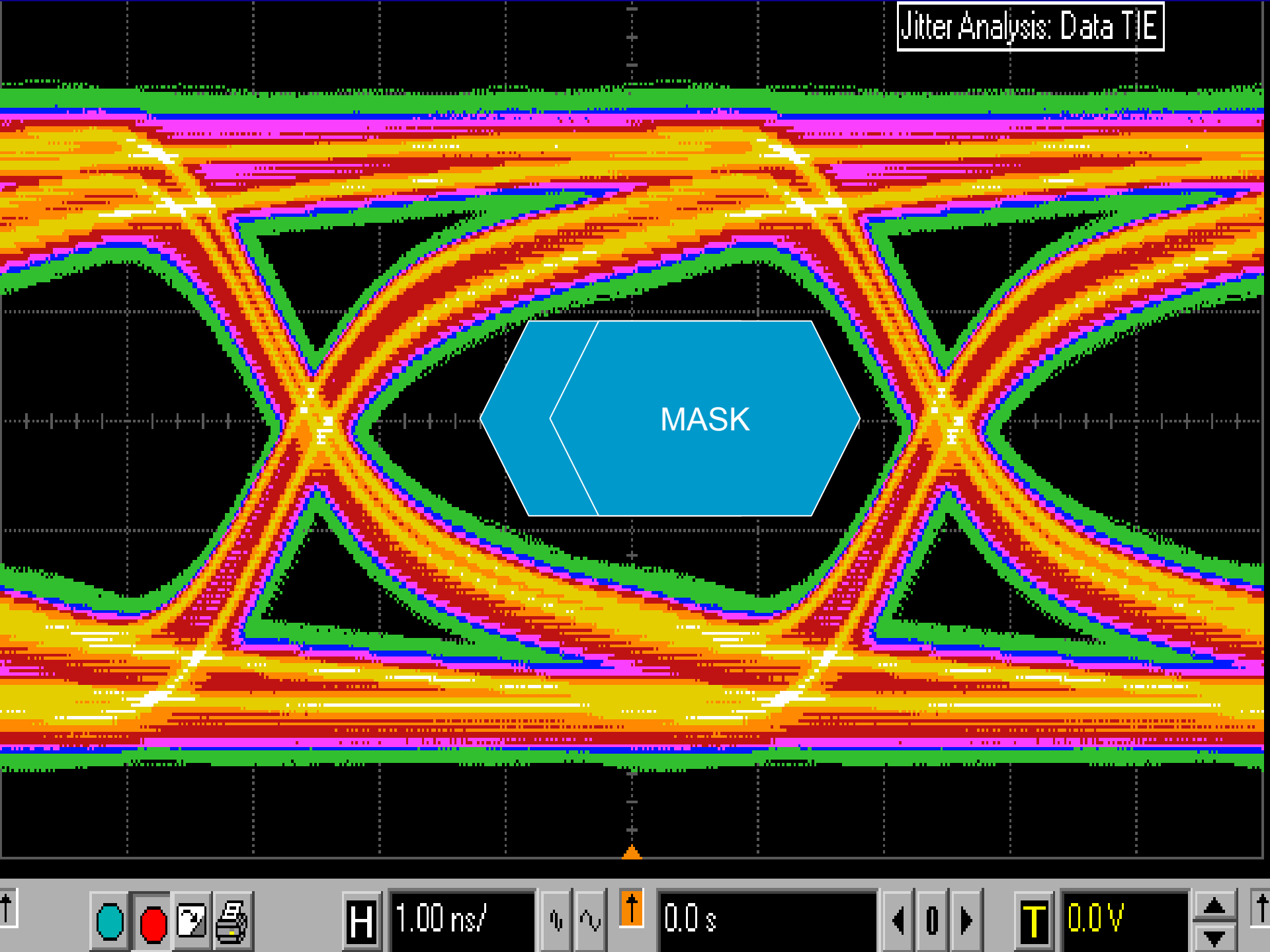
Jitter Analysis: Data TIE
MASK
H
1.00 ns/
0.0 s
T
0.0 V

Parameters from an Eye Pattern

(a) Jitter/Skew

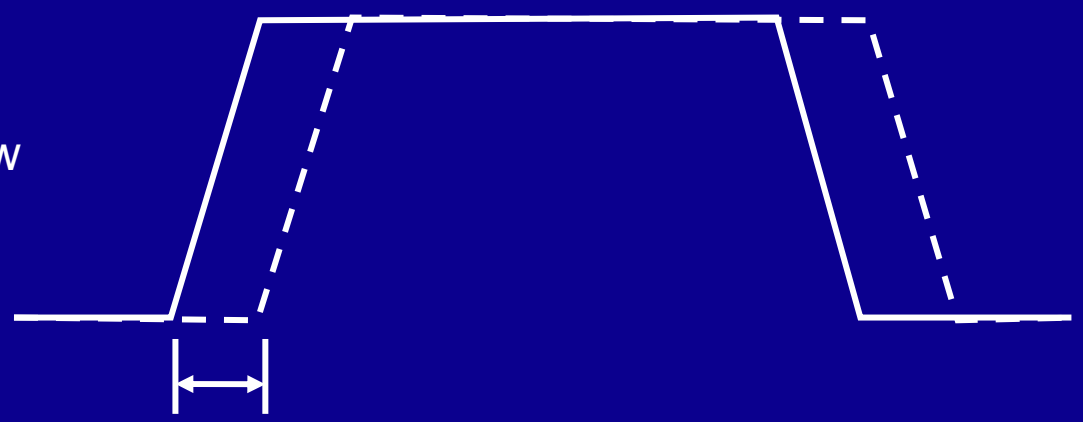

© STAR-Dundee Ltd 2011

Parameters from an Eye Pattern

(b) Attenuation

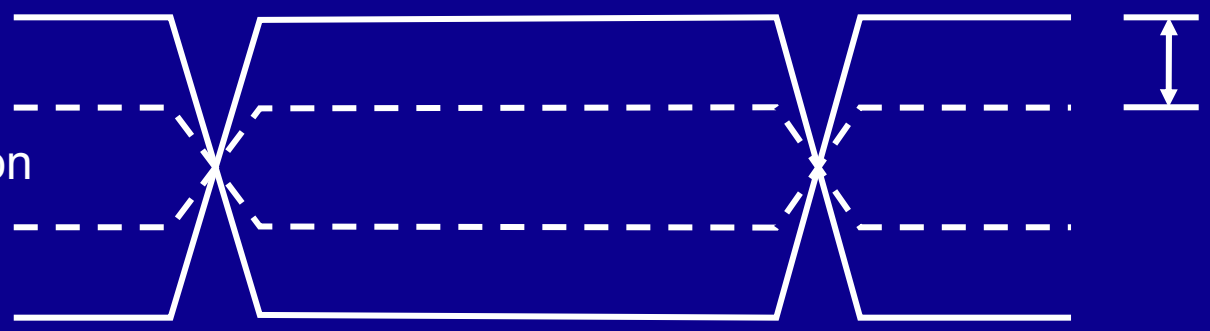

© STAR-Dundee Ltd 2011

Parameters from an Eye Pattern

(c) Bias

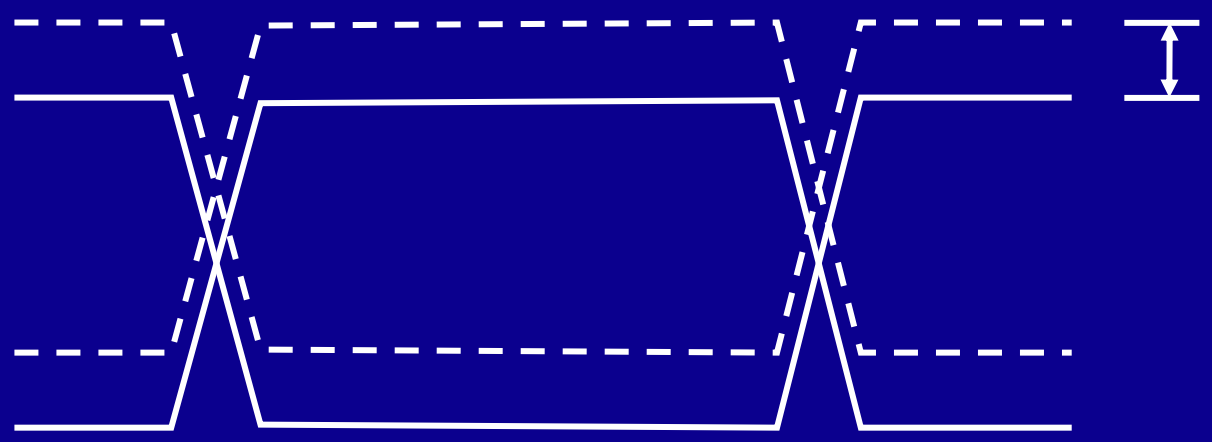

© STAR-Dundee Ltd 2011

Parameters from an Eye Pattern

(d) Slew

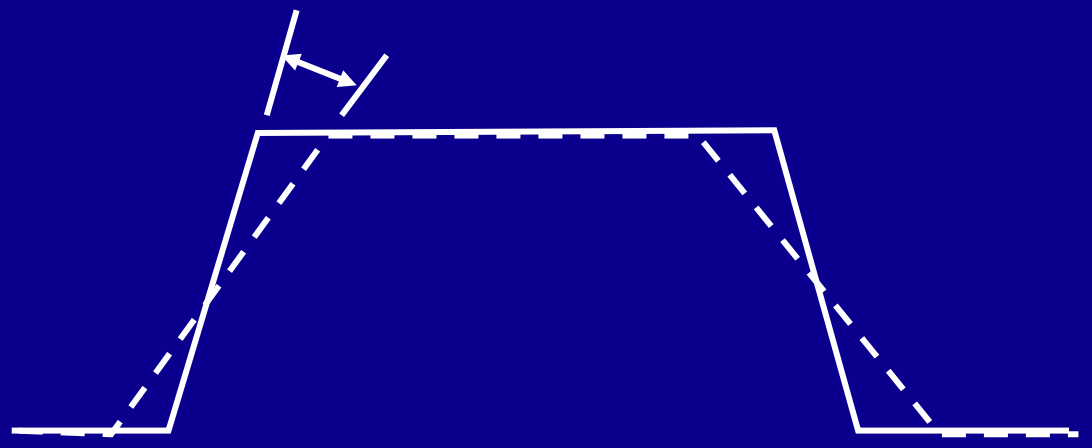

© STAR-Dundee Ltd 2011

SpaceWire Physical Layer Tester

- Check the margins of these parameters:
  - Skew
  - Jitter
  - Attenuation
  - Bias
  - Slew
- Receives and manipulates the LVDS signals to do this

© STAR-Dundee Ltd 2011

SpaceWire Physical Layer Tester

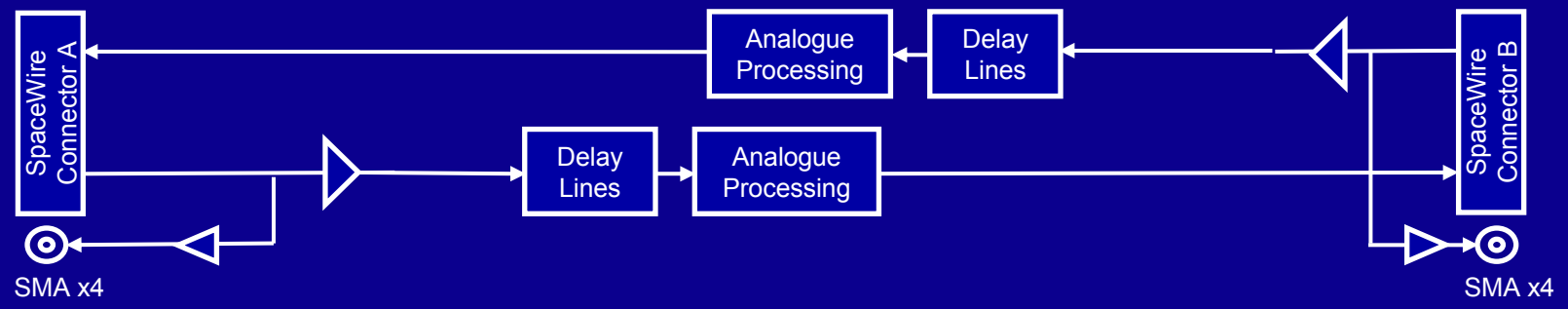

© STAR-Dundee Ltd 2011

Analogue Chain: Overview

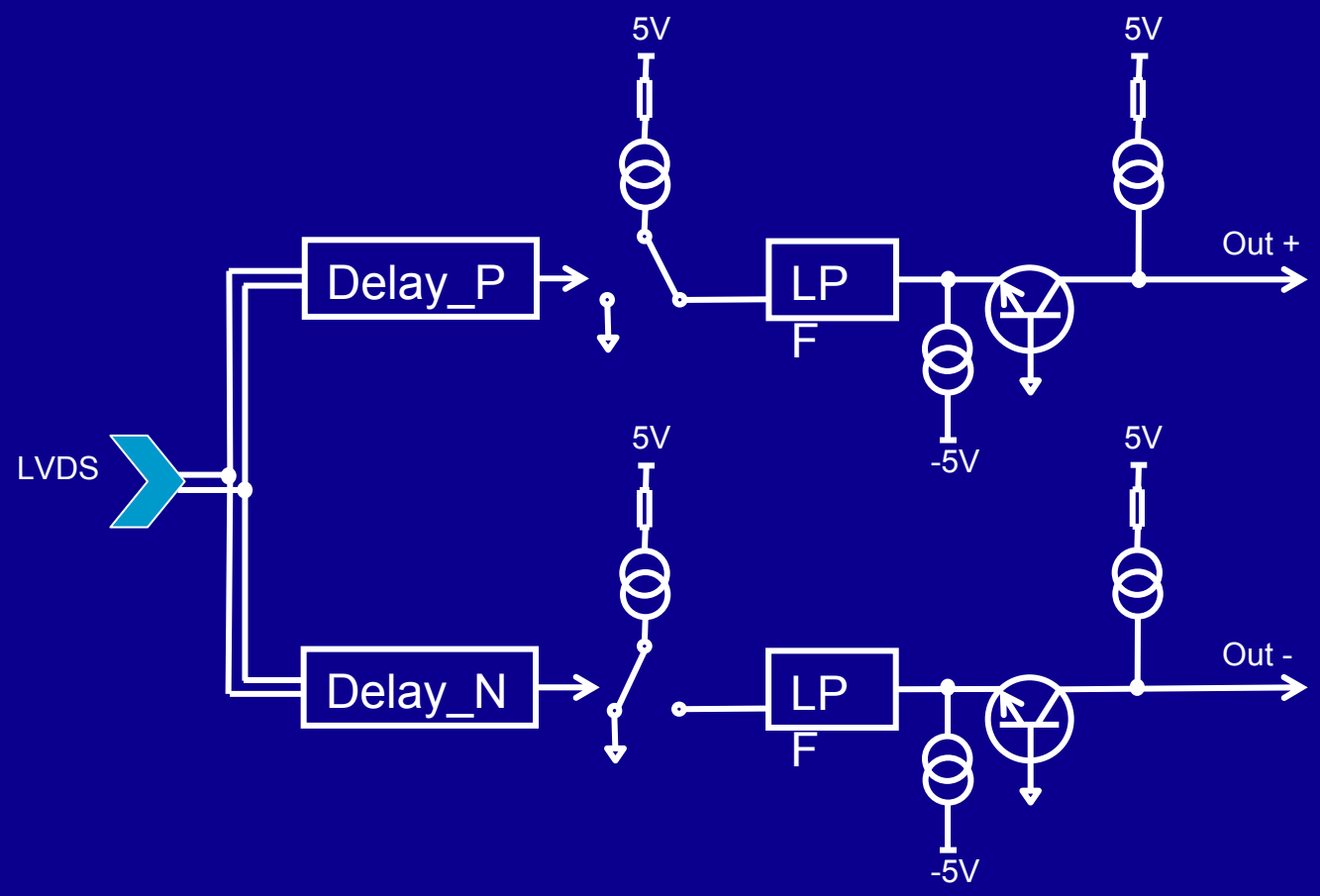

© STAR-Dundee Ltd 2011

Analogue Chain: Voltage Clamps

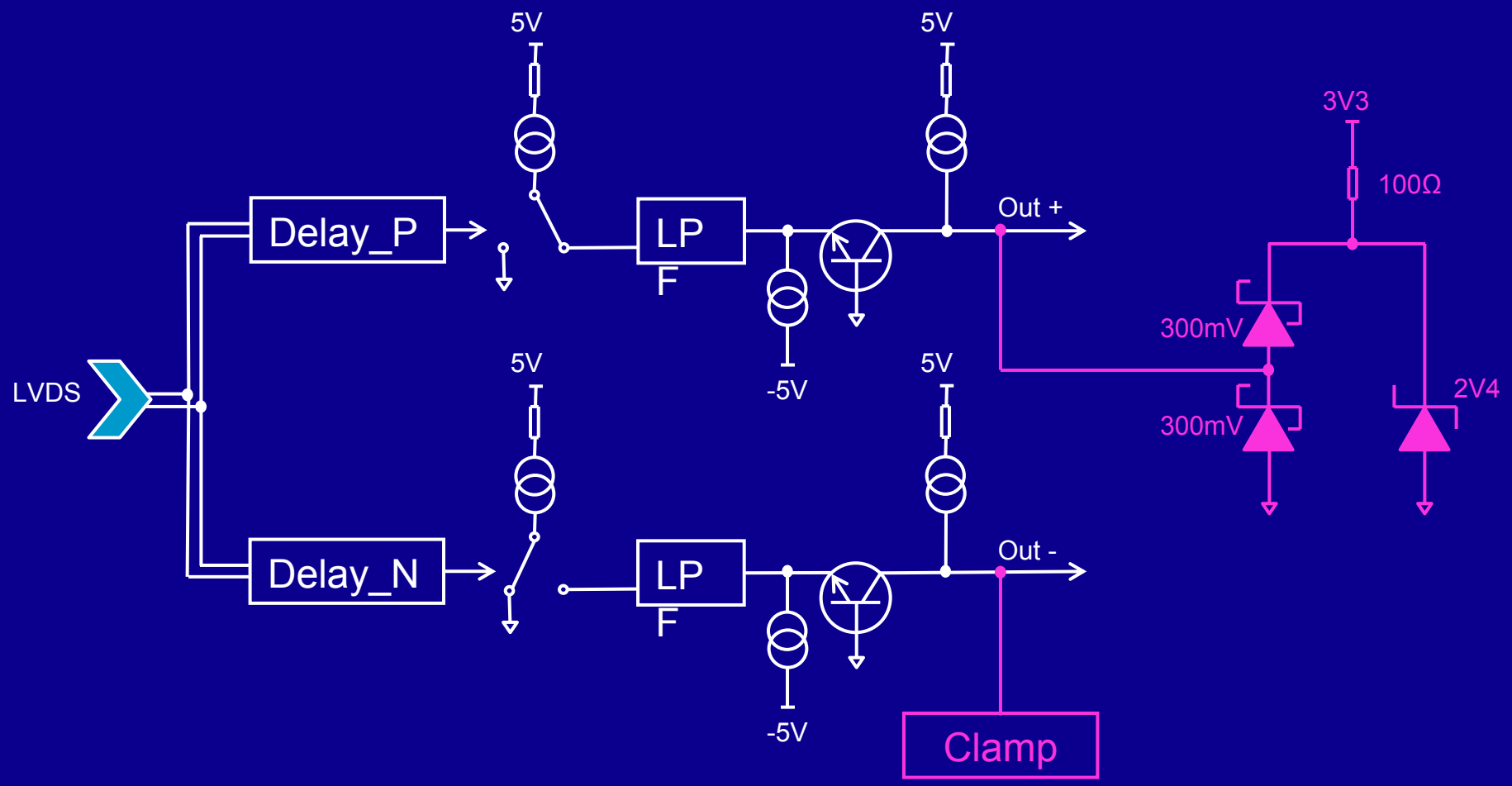

© STAR-Dundee Ltd 2011

Analogue Chain: Swing

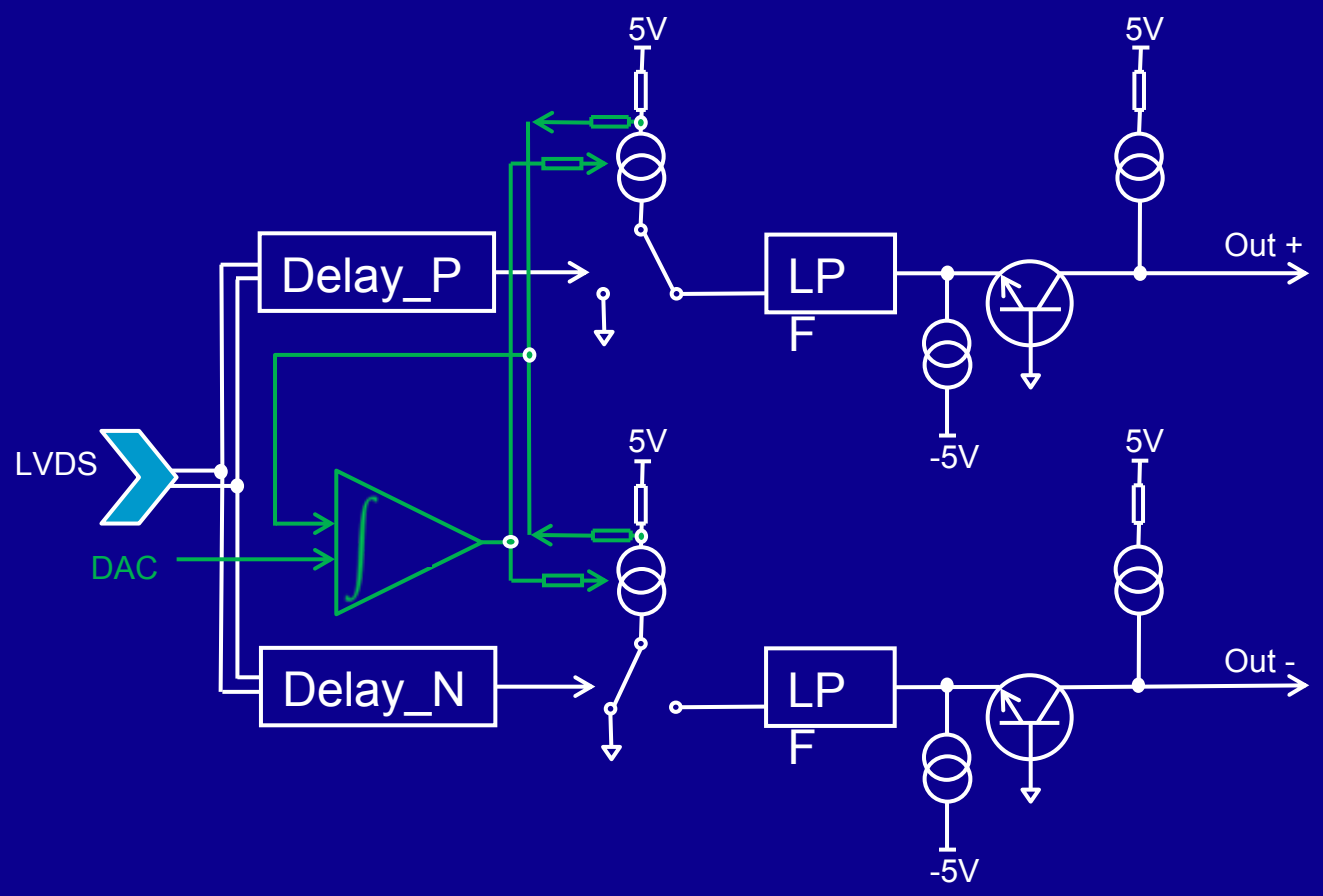

© STAR-Dundee Ltd 2011

Analogue Chain: Low Pass Filter

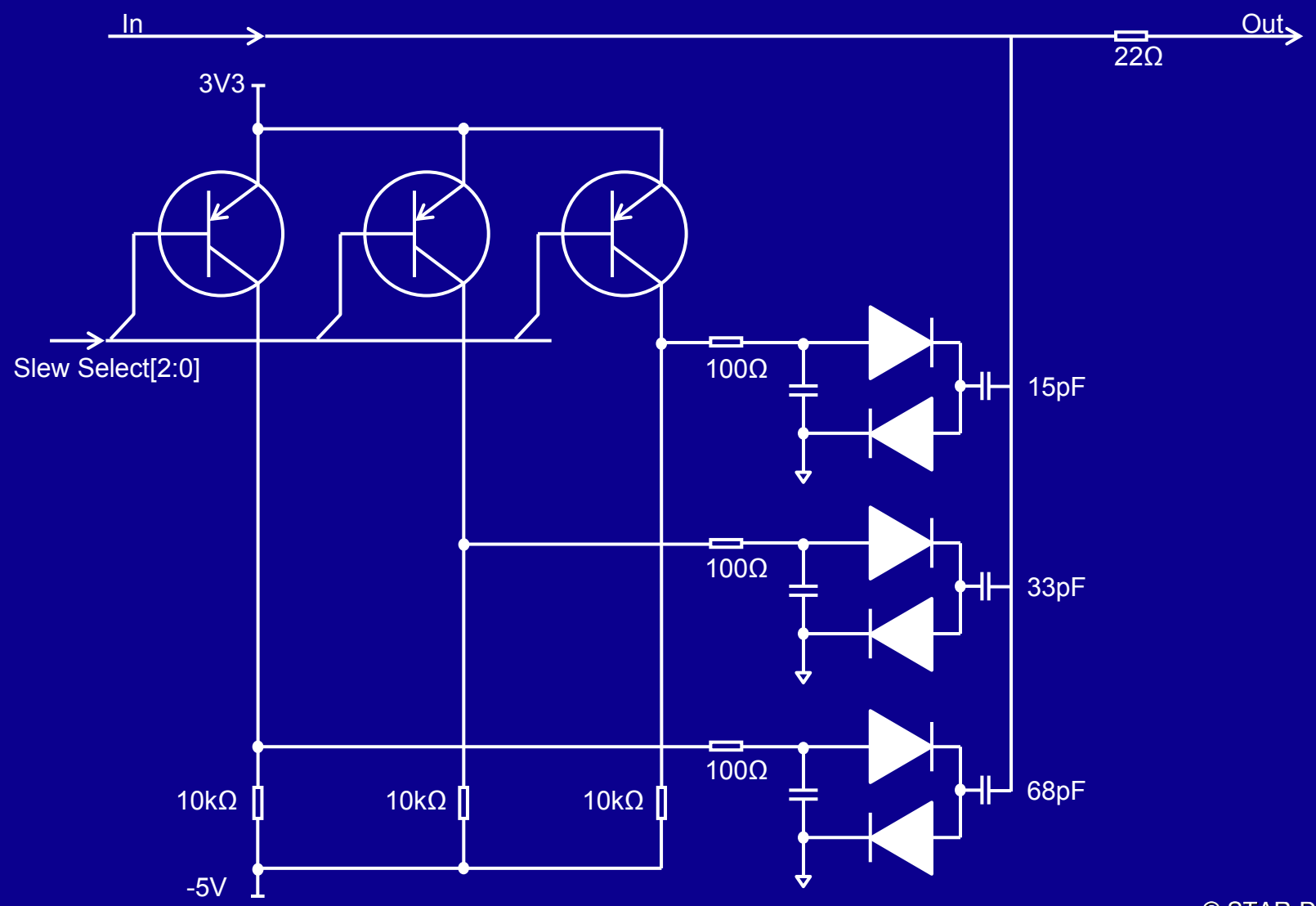

© STAR-Dundee Ltd 2011

Analogue Chain: Common Mode

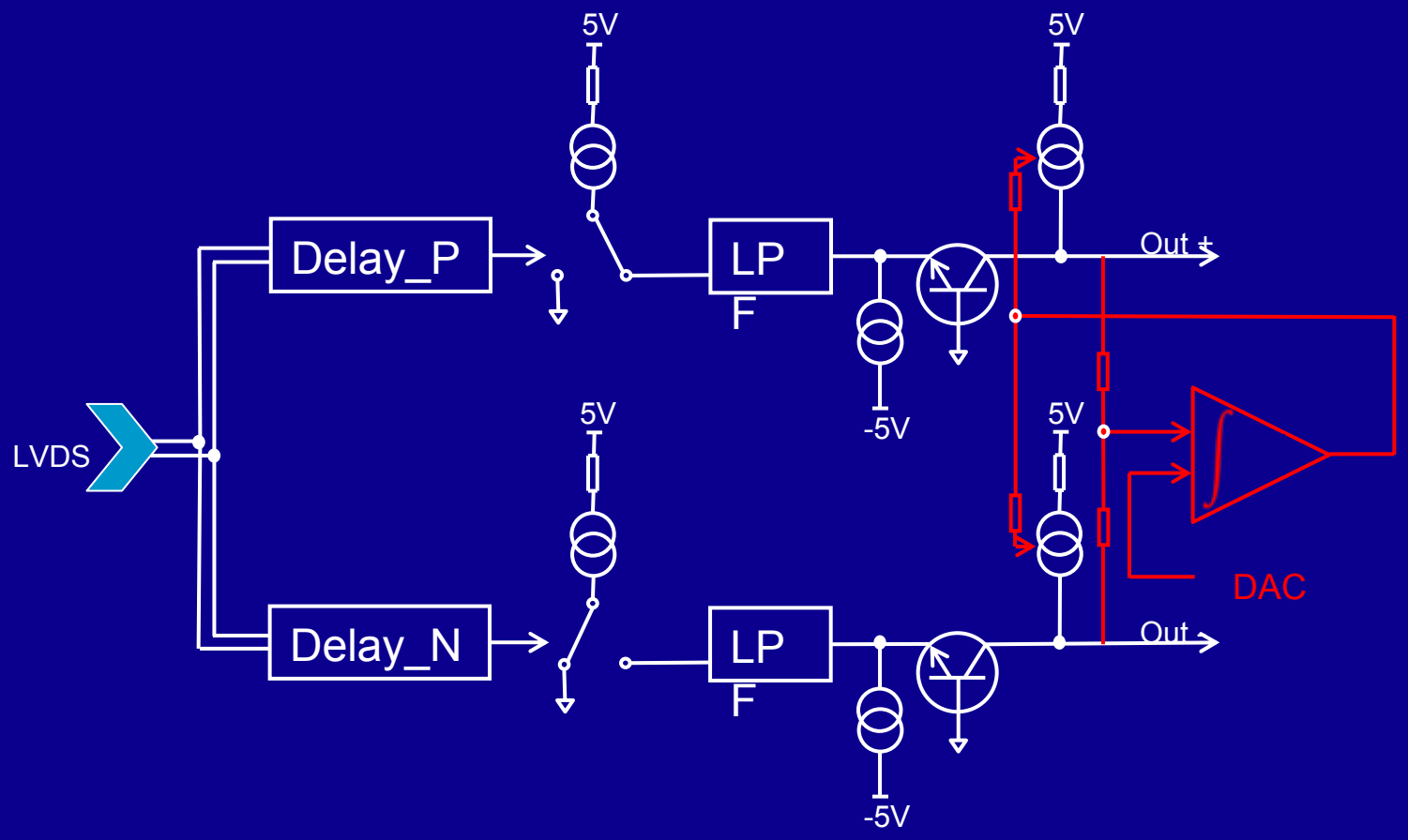

© STAR-Dundee Ltd 2011

Analogue Chain: Trim

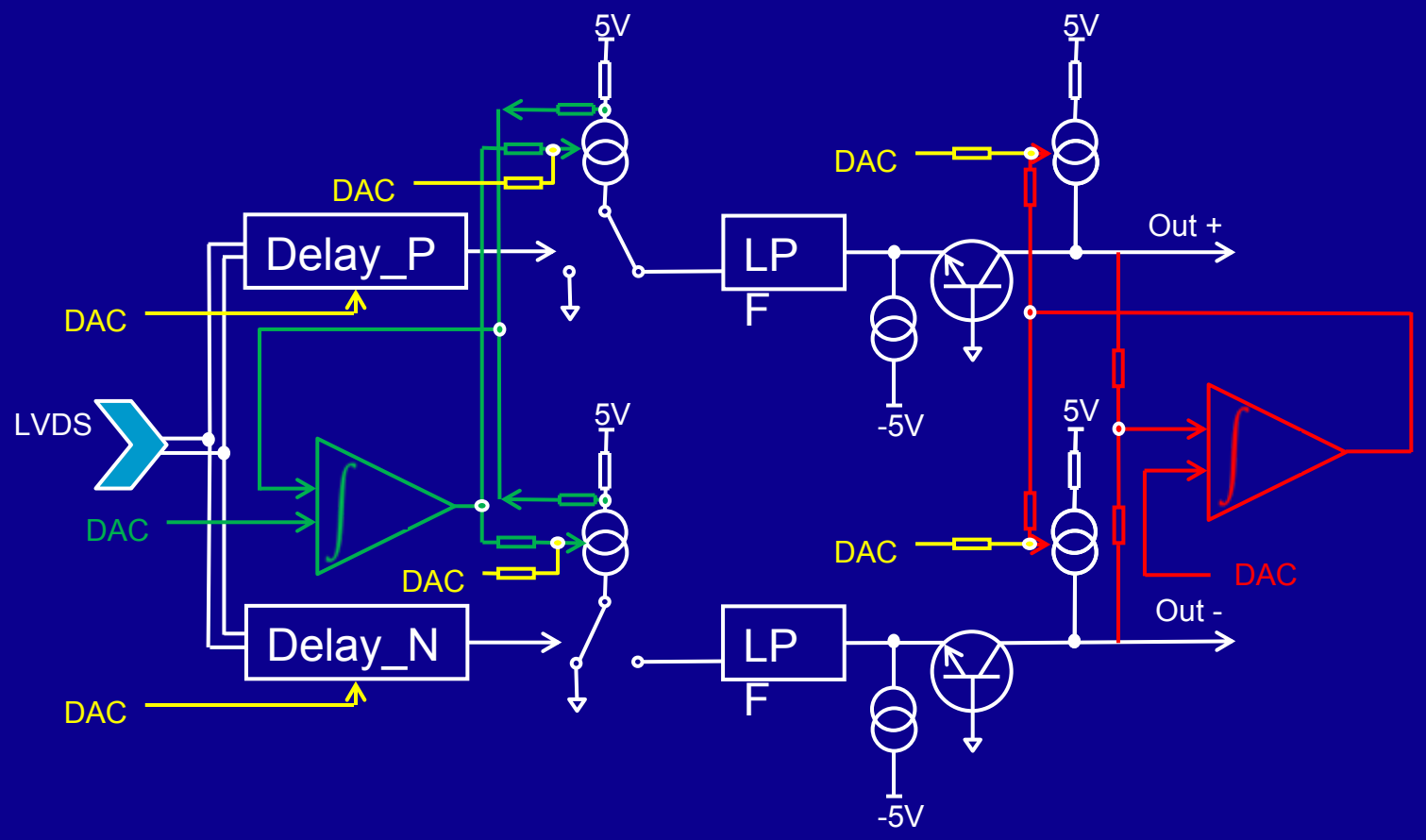

© STAR-Dundee Ltd 2011

Prototype

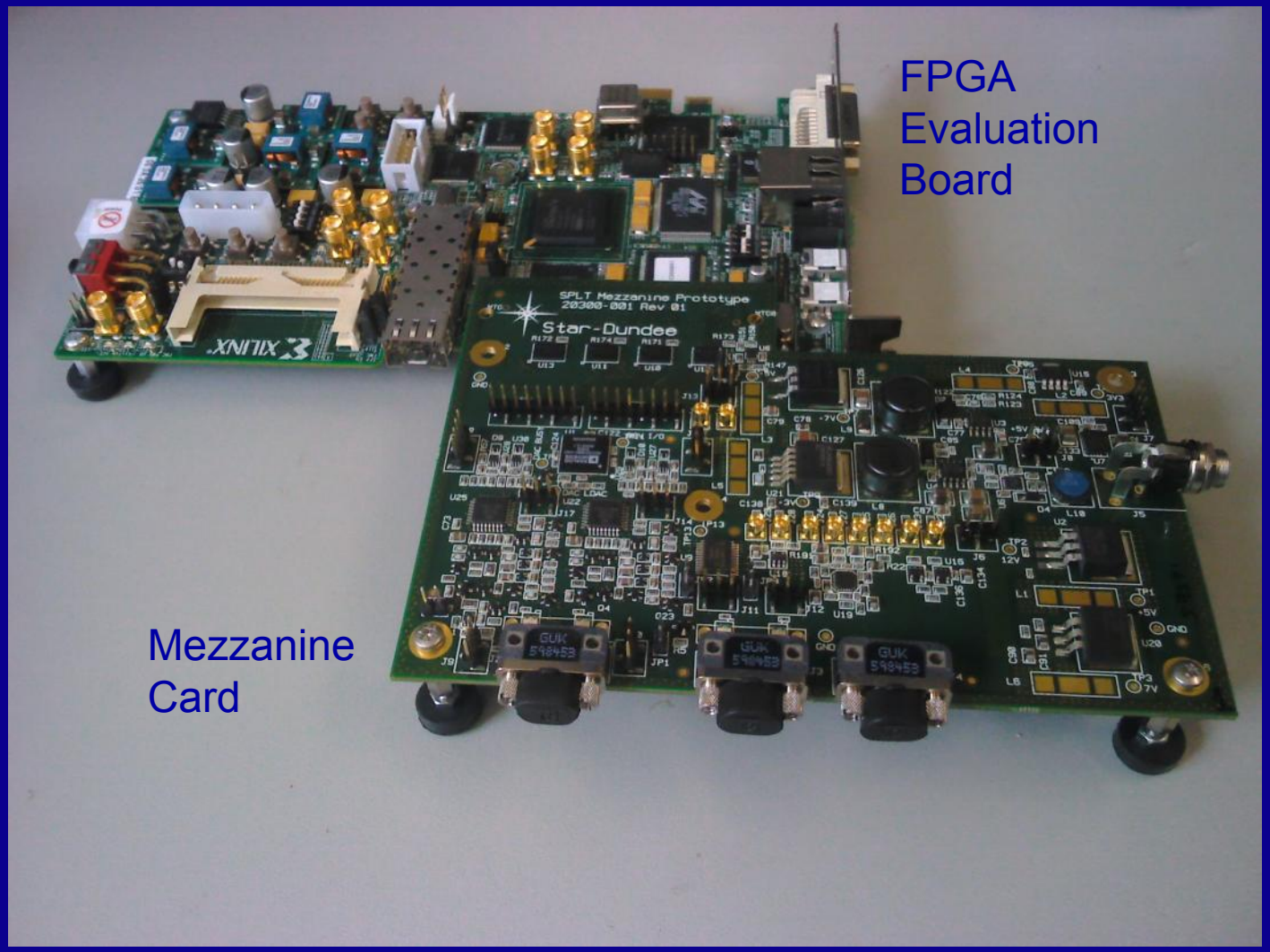

© STAR-Dundee Ltd 2011

LVDS Driver/Receiver Requirements

- Low power
- High speed
- Integrated termination
  - Two 50 ohm resistors to 1.2V termination voltage
- Failsafe
  - Integrated biasing when input open circuit
  - To prevent receiver oscillation
- Cold sparing
  - High input impedance even when powered down
- High common mode voltage
  - Tolerant to common mode voltage beyond supply rails
- ESD protection

© STAR-Dundee Ltd 2011

LVDS Driver/Receiver Requirements

- Tri-state
  - i.e. power off driver
  - Outputs are then high-impedance
- Receive detect function
  - Secondary very low power detector
  - Detects when differential signal goes low
  - Then powers up main receiver
- Receiver hysteresis
  - Ability to switch on or off

© STAR-Dundee Ltd 2011

SpaceWire Conference

- 8-10 November 2011
- San Antonio USA

© STAR-Dundee Ltd 2011