This document and its content is the property of Astrium [Ltd/SAS/GmbH] and is strictly confidential. It shall not be communicated to any third party without the written consent of Astrium [Ltd/SAS/GmbH]

The Use of LVDS on Astrium Satellites

Dr. Rajan Bedi

Mixed-Signal Design Group Manager

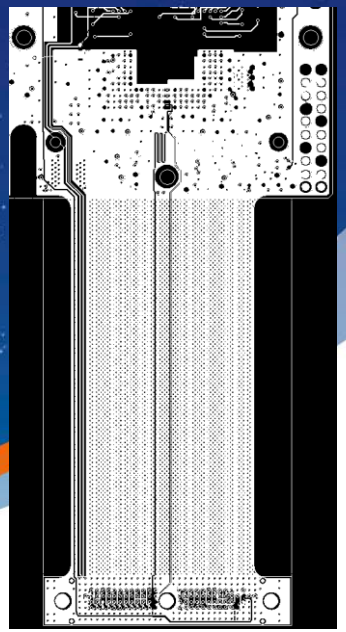

29th June 2011

DTI EXPORT CONTROL RATING: 3A001a1a, 3A001a2, 3C001a, 3C001b, 3E001, 4A003a, 4E001, 5E001b1 : Rated by: R. Bedi

All the space you need

ASTRIUM
AN EADS COMPANY

Astrium's Mixed-Signal Design Group

- *The MSDG provides high-speed, mixed-signal design capability to support Astrium's internal telecommunication products.*
- *The MSDG provides design consultancy services to other Astrium business units, e.g. Earth Observation, Navigation and Space Science, as well as external companies.*
- *The MSDG carries out research into mixed-signal processing techniques to ensure future Astrium payloads achieve better performance and become more competitive.*

Flight Design Heritage

- *The MSDG (previously PPG) has provided the mixed-signal designs for the Alphasat, Inmarsat 4, Skynet 5 and OBMM payloads.*

This document and its content is the property of Astrium [Ltd/SAS/GmbH] and is strictly confidential. It shall not be communicated to any third party without the written consent of Astrium [Ltd/SAS/GmbH].

Telecommunication Satellites Digital Payload Processor

- *LVDS used on ASIC-to-ASIC intra-module and inter-unit interfaces.*
- *LVDS used on SpaceWire, TC & TM interfaces.*
- *Point-to-point & multi-point LVDS links.*

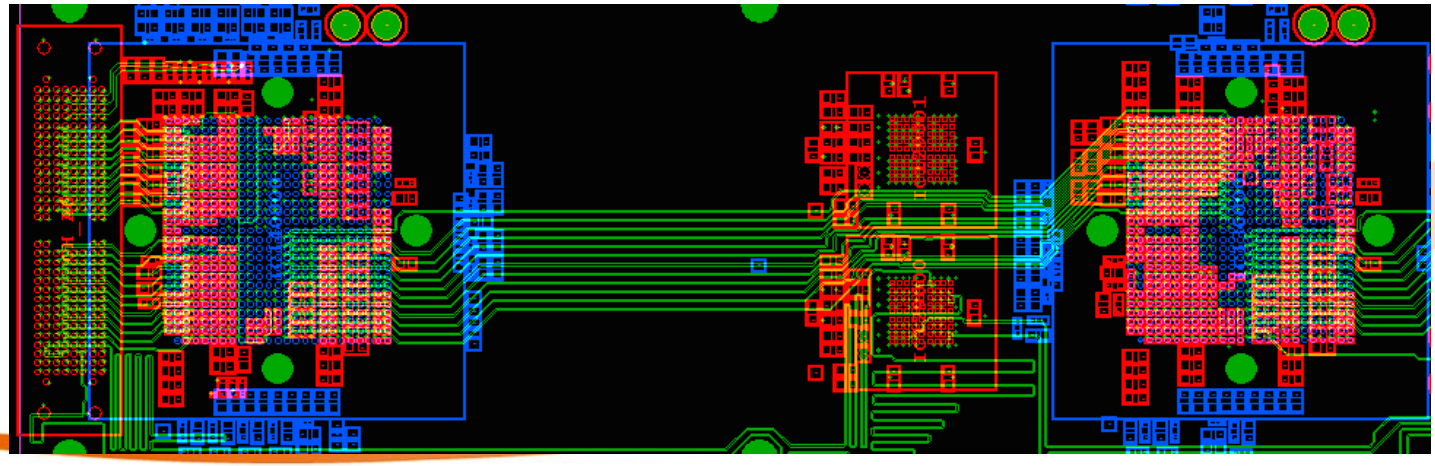

This document and its content is the property of Astrium [Ltd/SAS/GmbH] and is strictly confidential. It shall not be communicated to any third party without the written consent of Astrium [Ltd/SAS/GmbH].

Earth Observation Satellites Digital Payload Processor

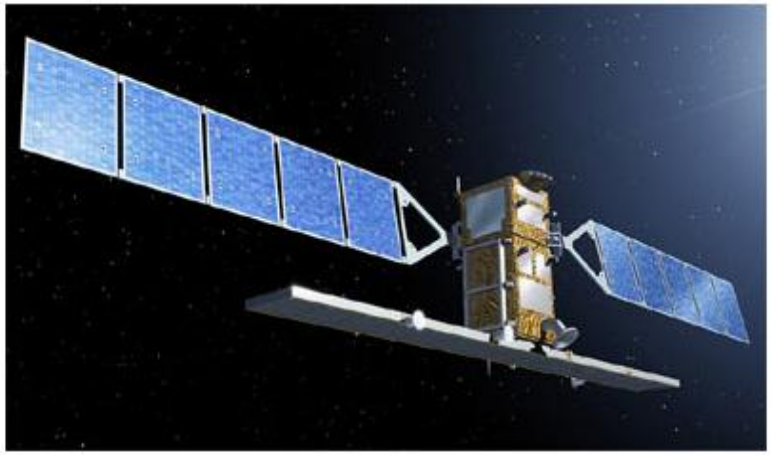

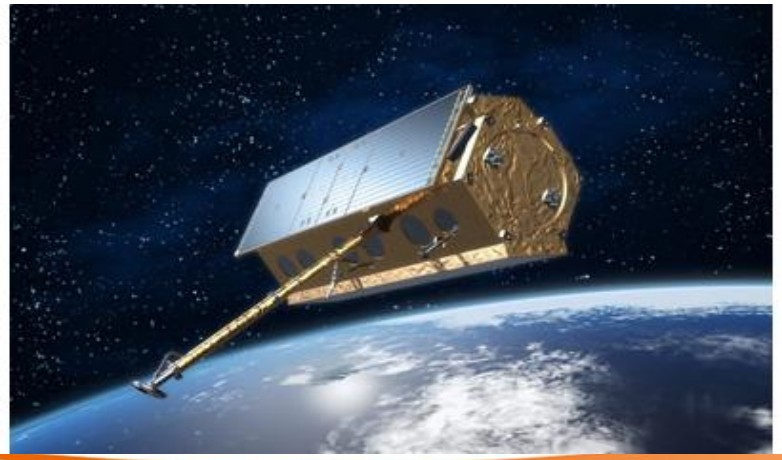

- *Digital RADAR electronics*
- *Point-to-point and multi-drop links.*
- *OBCs, mass memory, correlators, DSPs and SpaceWire.*

This document and its content is the property of Astrium [Ltd/SAS/GmbH] and is strictly confidential. It shall not be communicated to any third party without the written consent of Astrium [Ltd/SAS/GmbH].

Navigation Satellites
Digital Payload Processor

- *High-Speed data processing links.*

This document and its content is the property of Astrium [Ltd/SAS/GmbH] and is strictly confidential. It shall not be communicated to any third party without the written consent of Astrium [Ltd/SAS/GmbH].

Science Satellites
Digital Payload Processor

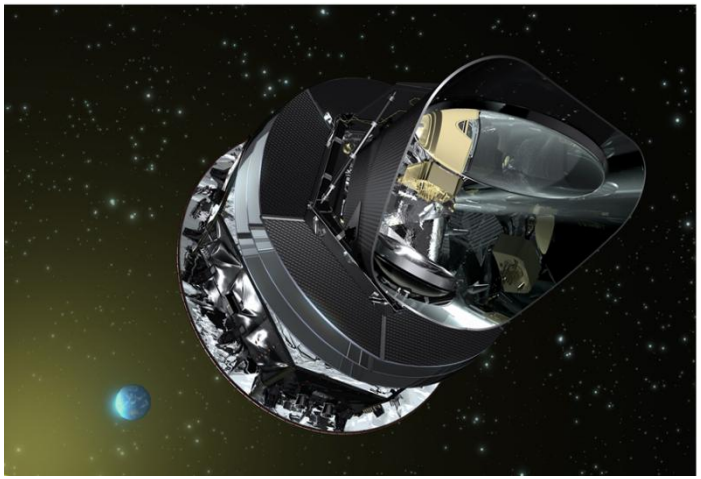

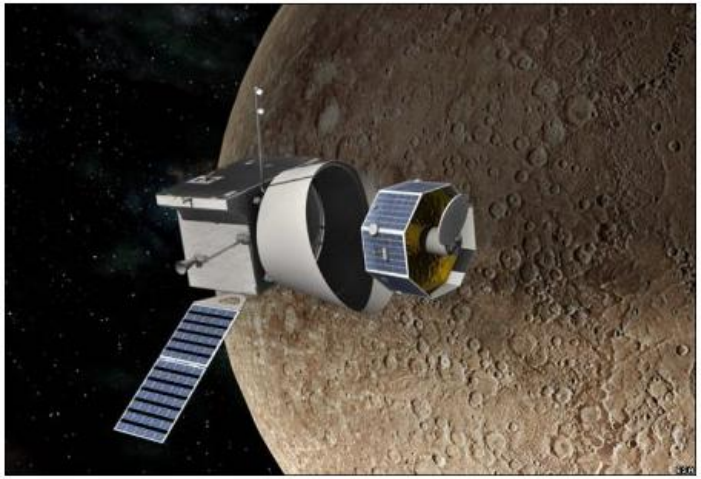

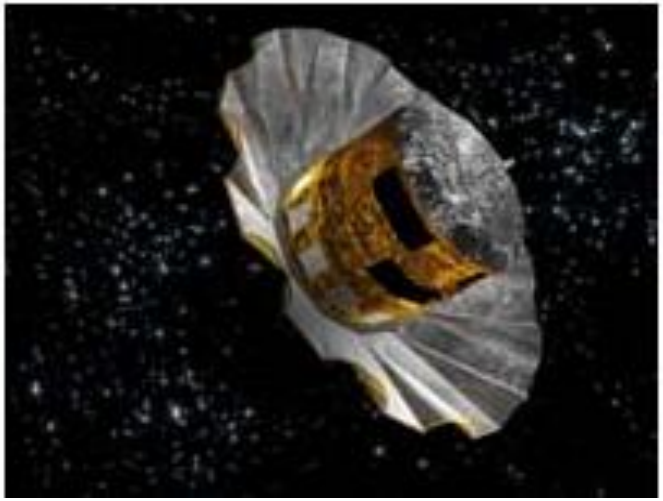

This document and its content is the property of Astrium [Ltd/SAS/GmbH] and is strictly confidential. It shall not be communicated to any third party without the written consent of Astrium [Ltd/SAS/GmbH].

Science Satellites
Digital Payload Processor

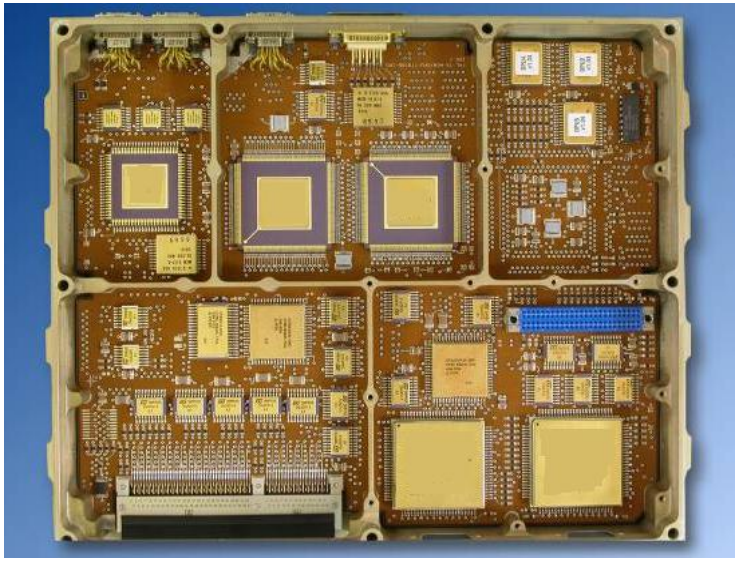

- *High-Speed data processing links.*
- *High-speed links to instruments.*
- *SpaceWire-like interfaces.*
- *Clock Distribution*
- *TC & TM.*

This document and its content is the property of Astrium [Ltd/SAS/GmbH] and is strictly confidential. It shall not be communicated to any third party without the written consent of Astrium [Ltd/SAS/GmbH].

Satellite Platform Computer

- *LVDS used on SpaceWire interfaces.*
- *LVDS used on TC & TM interfaces.*

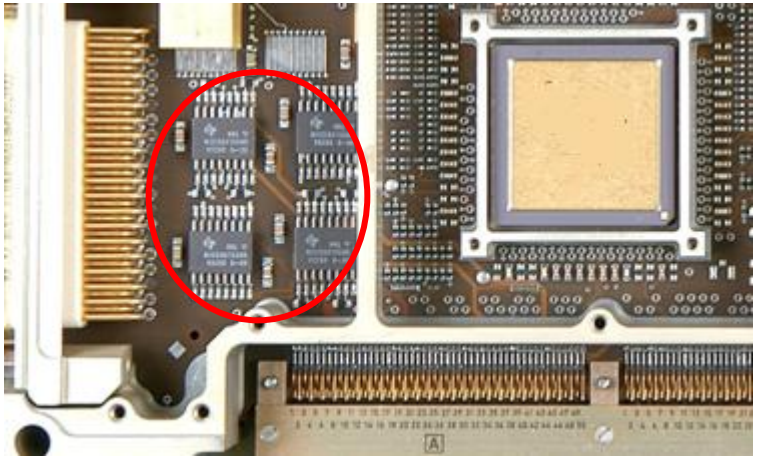

This document and its content is the property of Astrium [Ltd/SAS/GmbH] and is strictly confidential. It shall not be communicated to any third party without the written consent of Astrium [Ltd/SAS/GmbH].

Design-Level Testing

- *Pre and post-layout signal integrity analyses on all LVDS signals.*
- *LVDS signals routed as controlled impedance tracks.*
- *Ensure all traces of a differential pair are of equal length.*
- *Ensure differential traces are routed close together to minimise loop area.*
- *Ensure differential trace separation remains constant over its entire length.*

This document and its content is the property of Astrium [Ltd/SAS/GmbH] and is strictly confidential. It shall not be communicated to any third party without the written consent of Astrium [Ltd/SAS/GmbH].

Electrical AIT

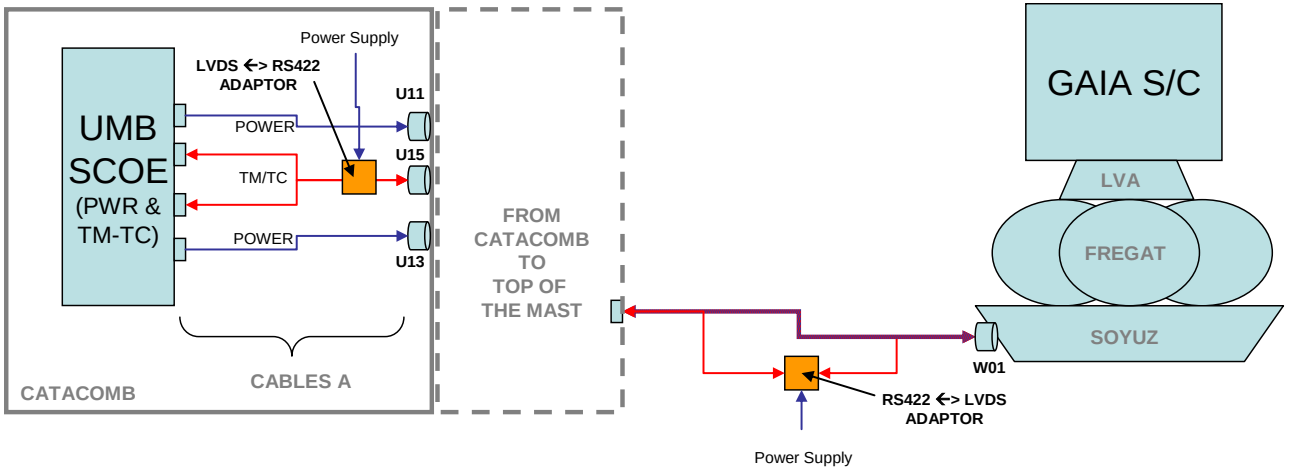

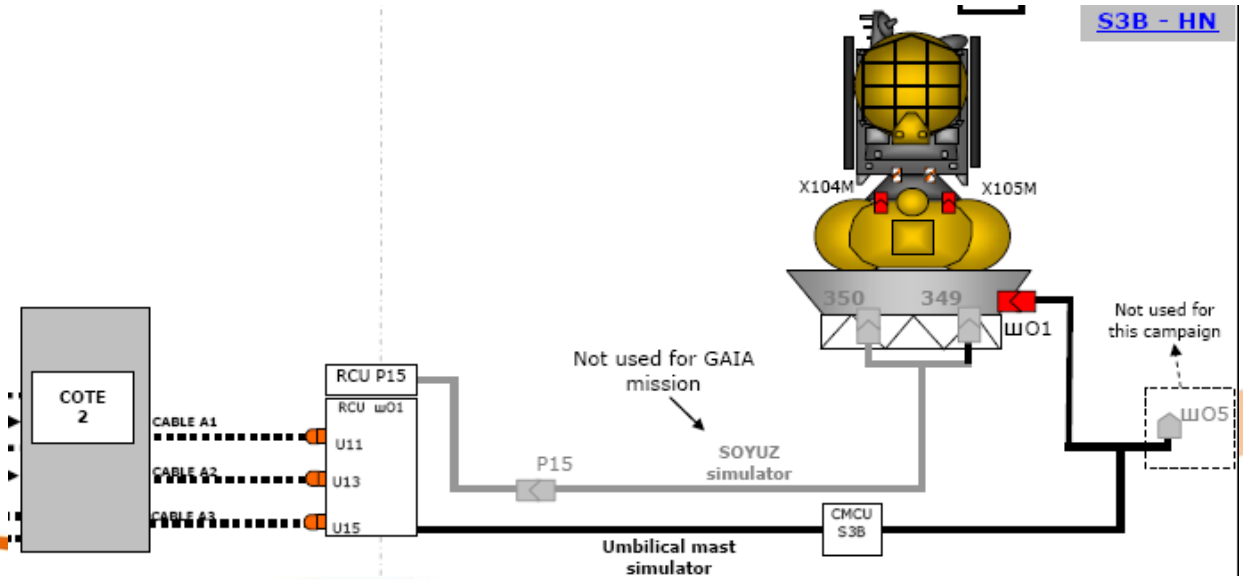

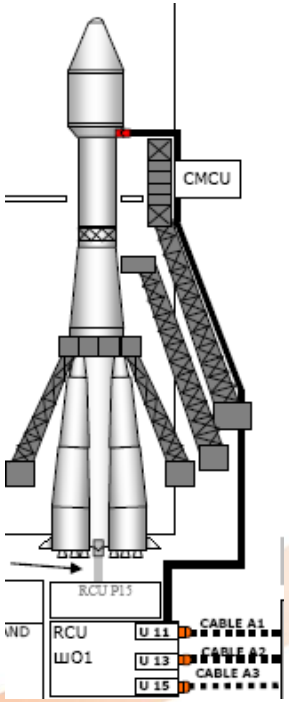

This document and its content is the property of Astrium [Ltd/SAS/GmbH] and is strictly confidential. It shall not be communicated to any third party without the written consent of Astrium [Ltd/SAS/GmbH].

Electrical AIT

- *GAIA OBC LVDS interface to EGSE.*
- *100 to 130 m LVDS links at the launch pad between spacecraft and EGSE.*
- *Repeaters to be inserted within the link.*
- *LVDS capable of 30m @ 10mHz.*

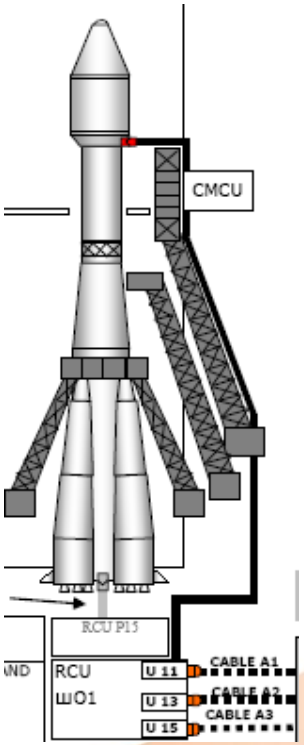

This document and its content is the property of Astrium [Ltd/SAS/GmbH] and is strictly confidential. It shall not be communicated to any third party without the written consent of Astrium [Ltd/SAS/GmbH].

Observed LVDS Failures
O/C, S/C, Floating Receiver Inputs

- *Receivers without failsafe can oscillate in response to input differential noise – GOCE failure!*

- *Internal failsafe circuitry has been added by vendors to ensure a stable output.*
- *Internal failsafe guarantees a stable high output in a low-noise environment.*

- *Internal Failsafe Operation*

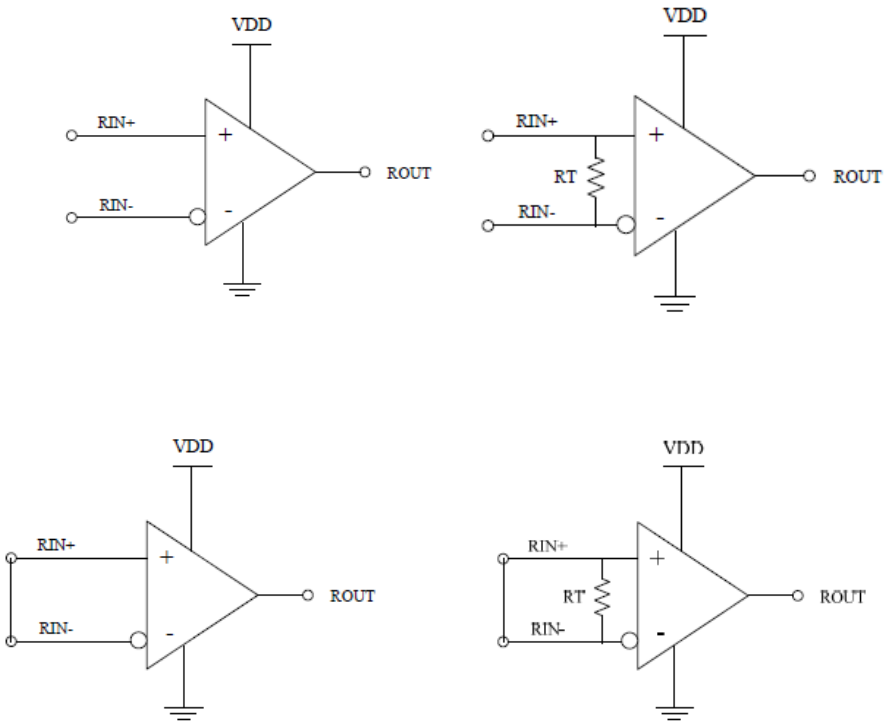

This document and its content is the property of Astrium [Ltd/SAS/GmbH] and is strictly confidential. It shall not be communicated to any third party without the written consent of Astrium [Ltd/SAS/GmbH].

Observed LVDS Failures
O/C, S/C, Floating Receiver Inputs

- *Internal Failsafe Operation*
- *Terminated Receiver Input*
  - *LVDS driver cable is disconnected*
  - *LVDS driver is tri-stated or off.*
- *Receiver may see noise as a valid signal and switch.*
- *Open-Circuit Receiver Input*
  - *In a multi-point or multi-drop configuration, unused nodes can be disconnected from the bus.*
- *Short-Circuit Receiver Input*
  - *Line fault, e.g. a crushed cable, can result in shorted inputs.*

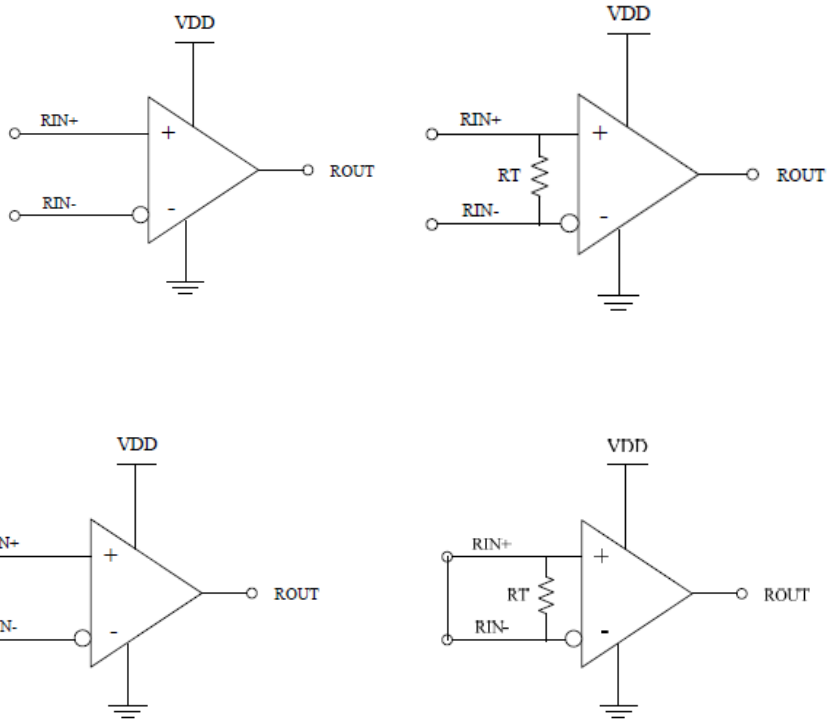

This document and its content is the property of Astrium [Ltd/SAS/GmbH] and is strictly confidential. It shall not be communicated to any third party without the written consent of Astrium [Ltd/SAS/GmbH].

Observed LVDS Failures
O/C, S/C, Floating Receiver Inputs

- *Internal Failsafe Operation*
- *Some vendors have integrated small current sources into their receivers.*
- *Maintains a d.c. voltage across RT when there is no input.*
- *Small offset built into internal comparator to support open and short failsafe configurations.*

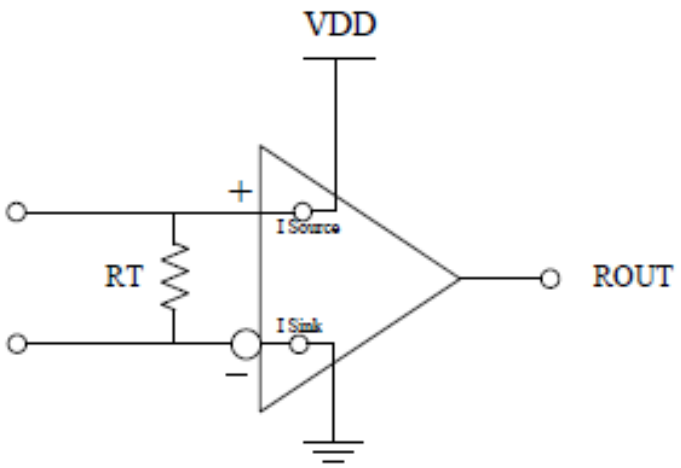

This document and its content is the property of Astrium [Ltd/SAS/GmbH] and is strictly confidential. It shall not be communicated to any third party without the written consent of Astrium [Ltd/SAS/GmbH].

Observed LVDS Failures
O/C, S/C, Floating Receiver Inputs

- *External failsafe circuitry can be used to improve reliability in noisier environments.*
- *Maintains a d.c. offset in the absence of a valid signal*
- *Bias network can unbalance the driver loop currents.*
- *This can distort the output potentially increasing the possibility of switching on input noise.*

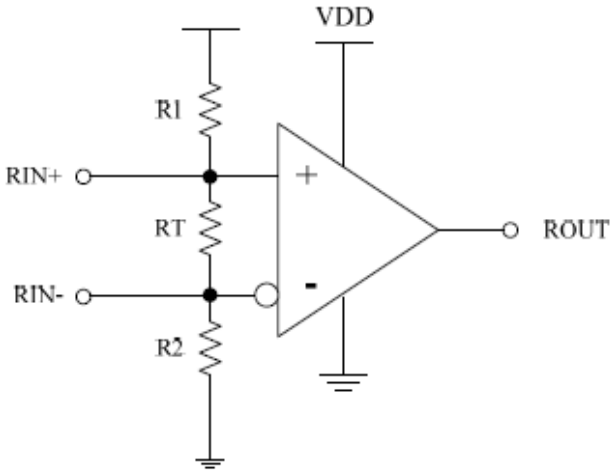

This document and its content is the property of Astrium [Ltd/SAS/GmbH] and is strictly confidential. It shall not be communicated to any third party without the written consent of Astrium [Ltd/SAS/GmbH].

Observed LVDS Failures
O/C, S/C, Floating Receiver Inputs

- *TI's Active Failsafe provides a failsafe function with minimal impact on the input signal during normal operation.*
- *Comparator continuously monitors both inputs to detect a loss of input signal.*
- *Comparator has a slower response and detects when the differential input falls below 80 mV.*
- *Functions over the entire receiver input common-mode range.*

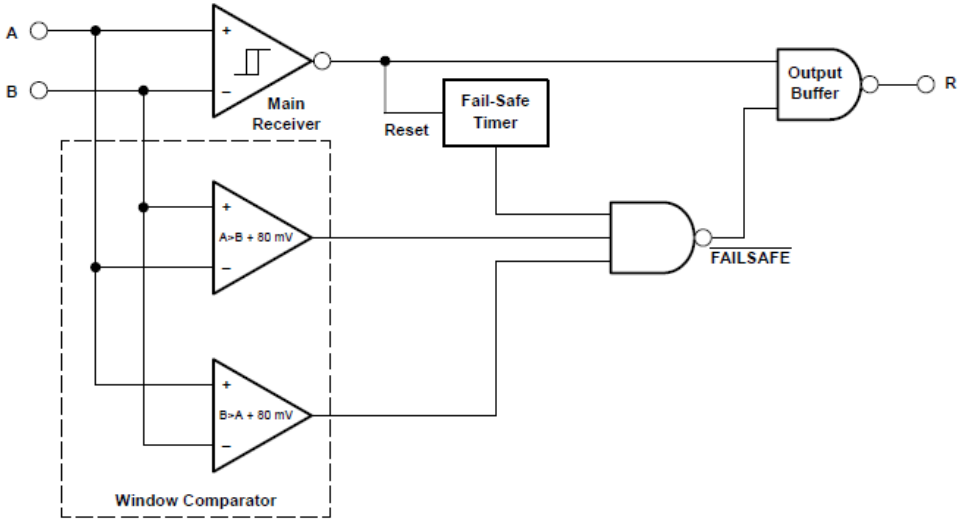

This document and its content is the property of Astrium [Ltd/SAS/GmbH] and is strictly confidential. It shall not be communicated to any third party without the written consent of Astrium [Ltd/SAS/GmbH].

Observed LVDS Failures
Overvoltage Fault Propagation

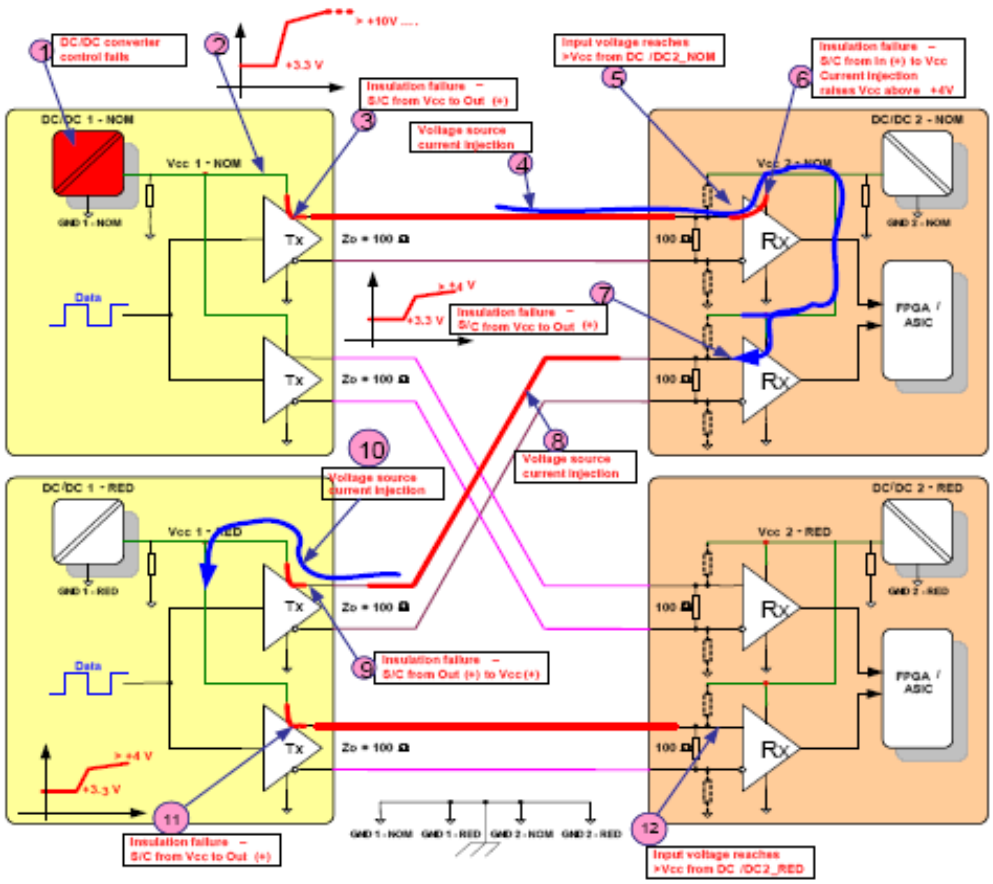

- *Failure propagation due to over voltage failure at one node of a cross-strapped LVDS link network.*

Lansdtroem & Gasti 2008

This document and its content is the property of Astrium [Ltd/SAS/GmbH] and is strictly confidential. It shall not be communicated to any third party without the written consent of Astrium [Ltd/SAS/GmbH].

Observed LVDS Failures
Overvoltage Fault Propagation

- *Loss of a link/network due to the LVDS driver power supply exceeding its absolute maximum level.*
- *Excessive voltage propagated to output pins, receiver input pins and receiver supply.*
- *"When the device is powered off, VCC must be clamped to ground"*
- *Tests by vendors confirm that overvoltages are present but not propagated.*
- *Tests by vendors confirm that overvoltages permanently damage the LVDS drivers.*
- *Vendors do NOT guarantee their overvoltage results as absolute maximum ratings have been exceeded.*

This document and its content is the property of Astrium [Ltd/SAS/GmbH] and is strictly confidential. It shall not be communicated to any third party without the written consent of Astrium [Ltd/SAS/GmbH].

Observed LVDS Failures
Overvoltage Fault Propagation

- *GAIA uses series resistors used to limit fault currents from a compromised LVDS driver.*
- *Series resistors do not excessively capacitively load the signal lines.*
- *Failsafe resistors can also be added to LVDS supply. Driver and receiver must use the same supply level.*
- *GAIA Status: OK for flight and OK for AIT*

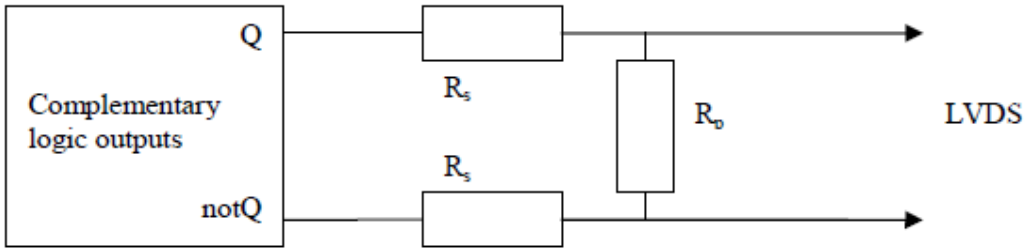

This document and its content is the property of Astrium [Ltd/SAS/GmbH] and is strictly confidential. It shall not be communicated to any third party without the written consent of Astrium [Ltd/SAS/GmbH].

Conclusion

- *Astrium uses the LVDS signalling format on all mission types for payload and platform processing.*
- *Astrium uses point-to-point, multi-point and multi-drop intra module and inter-unit LVDS links.*
- *Astrium uses LVDS for ASIC-to-ASIC, ASIC to mixed-signal, high-speed data processing, SpaceWire and OBCs.*
- *Astrium's LVDS designs use best-practice routing techniques and pre and post-layout analyses.*
- *Astrium performs mission-speed, module-level, functional testing and equipment-level functional & electrical testing.*

This document and its content is the property of Astrium [Ltd/SAS/GmbH] and is strictly confidential. It shall not be communicated to any third party without the written consent of Astrium [Ltd/SAS/GmbH].

Evolution of Differential Signalling for Space

- *Support for lower-swing and faster LVDS.*
- *Support for other higher-speed differential standards, e.g. point-to-point CML for SERDES applications.*
- *LVDS semiconductor vendors, dc-to-dc convertor manufacturers and the space industry must work closely together – would like to see an ECSS test/reliability standard.*
- *LVDS semiconductor vendors to consider fabrication on higher-voltage rather than small-signal technologies.*

This document and its content is the property of Astrium [Ltd/SAS/GmbH] and is strictly confidential. It shall not be communicated to any third party without the written consent of Astrium [Ltd/SAS/GmbH].