ST LVDS for Aerospace

Thibault BRUNET

Marketing Manager

ST Positionning in Aerospace

- Rad-Hard Qualified Products
  - State of the Art Radiation Tests
    - Enhanced Low Dose Rate – Displacement Damages – SET…
  - Engineering Models using same material as Flight Model
  - Stable Production Outcomes over Years
  - No additional Upscreen Costs
  - Guaranteed Lead Time
- With Best In Class Dedicated Products
  - Selected Technologies :
    - Radiation – Stable Quality through Volume - Longevity
  - Specific Design with Specific Radiation Targets
  - Specific Packaging & Assembly Location
  - Agency Qualification

ST portfolio for aerospace

Discrete devices

- New MOSFETs
- New Bipolar transistors
- New Schottky diodes
- New Bipolar diodes

Logic and interfaces

- New Bus drivers
- New Level shifters
- ACMOS logic
- HCMOS logic
- CMOS4000

Analog and sensors

- ADC
- New Op-amps
- New Comparators

Power devices

- Linear regulators
- New PWM Controllers

Legend:

- ESCC
- DSCC
- Development
- 300 krad
- 50/100 krad
- Hirel

Standalone LVDS - Status

- Hirel Version Available Now
  - No Radiation Guarantee - QML-V Qualified
- Rad-Hard Version Under Development
  - Design : Under Completion
    - HF7CMOS : 0.25µm CMOS (same as RHF801 Comparator)
  - EM : 4Q11
  - QML-V Qualification : Mid 2012
    - 300 krad HDR + 100 krad LDR
  - EPPL : 3Q12
- To be Discussed :
  - Repeater - Multidrop (also for clock distribution)

LVDS31A and LVDS32A – Driver/Receiver

- Key Features :
  - 400 Mbps (200MHz)
  - Skew : 0.3ns
  - 2.5V to 3.3V supply
  - Power consumption : 25 mW
  - Disable Pin
    - high output impedance
  - Cold spare on all pins
  - SMD : 5962-98651 - 5962-98652

Development
EM : 4Q11

31A

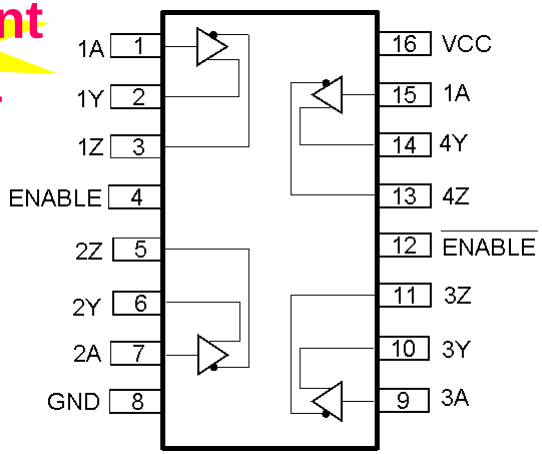

32A

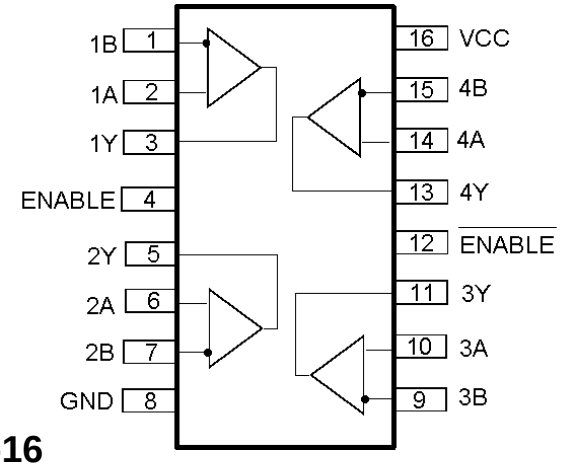

- Rad-hard Target:
  - 300krad High & Low Dose Rate
  - SEL free @ 120 MeV.cm2/mg @ 125°C
  - SEU-free by De

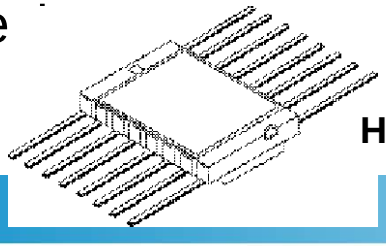

Hermetic Flat-16

LVDS Cell in 65 nm

- Part of the Rad-Hard Library :
  - Driver and Receiver Cells
  - Cold Spare
  - Around 700 Mbps
- Availability : Within the Rad-Hard Library
  - Planned Validation : Mid 2012