ESA's Requirements for future LVDS devices

J.ILSTAD
ESTEC
29/06/2011

ESA UNCLASSIFIED – For Official Use

Outline

1. What issues do we face with LVDS?
2. What functions do we need?
3. Why do we need to tackle these issues?
4. How can we tackle these problems?
5. Definition of requirements for new LVDS devices

European Space Agency

ESA UNCLASSIFIED – For Official Use

What issues do we face with LVDS?

Many different LVDS Standards

LVDS Standard	Standard Characteristics	Comments
ANSI/TIA/EIA-644-1995	3.5mA drive, max data rate of 655 Mbps and theoretical max of 1.923 Gbps based on a loss-less media. Fail-safe operation of the receiver under fault conditions is discussed Baseline point-to-point, other configurations issues as multi-receiver operation.	ANSI/TIA/EIA-TIA version is the most generic and it is intended to multiple applications
IEEE 1596.3 Scalable Coherent Interface-SCI	is an application specific standard “SCI”.Originally electrical specifications were based on ECL technology. Addresses only high data rate aspects, not low power concerns. Specific encoding for packet switching. Could be used in single-ended mode over short distances (4 wires)	Features similar: driver output levels, receivers threshold and data rate Differs in load conditions
ANSI/TIA/EIA-899–M LVDS	10mA drive, extends from point-to-point applications to multi-point and multi-drop applications, M-LVDS (& BLVDS) products are capable of data rates in excess of 3 Gbps.	BLVDS features only similar voltage swing. BLVDS is actually not a formal standard.
G-LVDS proprietary Standard	Does not specify any transmitter drive current Places the driver output voltage offset closer to ground potential.. Point-to-point	LVDS is widely used in Telecom industry

European Space Agency

ESA UNCLASSIFIED – For Official Use

What issues do we face with LVDS?

Many different LVDS Standards

ANSI TIA/EIA 644a

IEEE 1596.3 - SCI

G-LVDS

ANSI/TIA/EIA-899–M

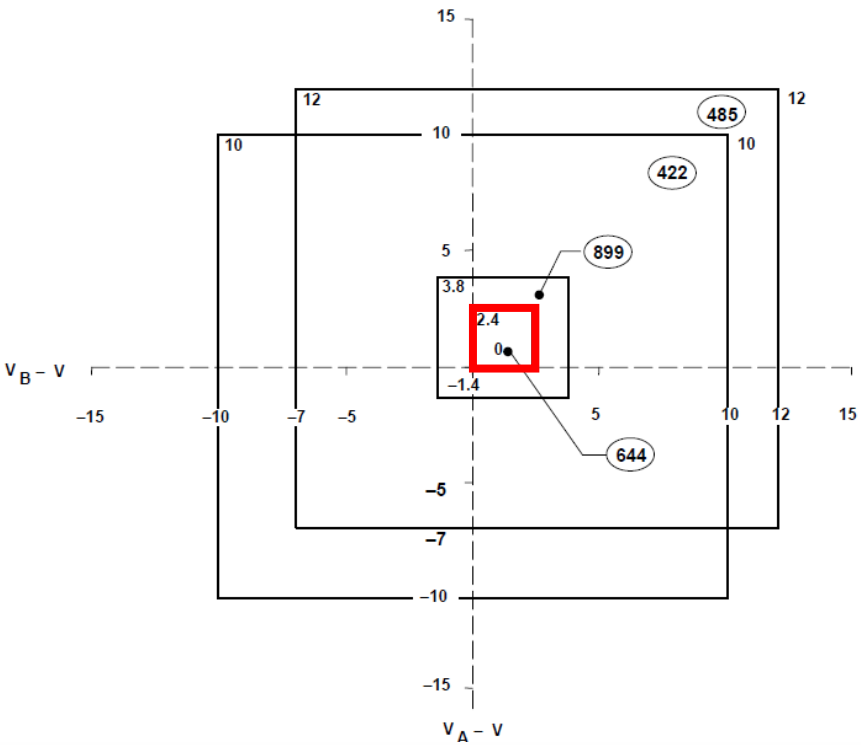

Parameter	LVDS	BLVDS	M-LVDS	GLVDS
TX VOD	250 – 450 mV	240 – 500 mV	480 – 650 mV	150 - 500 mV
TX VOS	1.125 V	1.3 V	0.3 – 2.1 V	75 – 250 mV
TX RL	100 Ω	27 - 50 Ω	50 Ω	Internal to RX
TX IOD	2.5 – 4.5 mA	9 – 17 mA	9 – 13 mA	adjustable
TX IOS	<24 mA	< 65 mA	< 43 mA	-
RX VTH	+/-100 mV	+/-100 mV	+/-50 mV	+/-100 mV
RX Vin	0 to +2.4 V	0 to +2.4 V	-1 to 3.8 V	-0.5 to 1 V
VCM	+/-1 V	+/-1 V	+/-2 V	+/-0.5 V

ESA UNCLASSIFIED – For Official Use

What issues do we face with LVDS?

Procurement - Non European solution imposes restrictions

Component traceability has greater uncertainty

Availability of key products is uncertain

ITAR makes part procurement difficult

ESA UNCLASSIFIED – For Official Use

What issues do we face with LVDS?
Implementation issues

Creative engineering can lead to problems

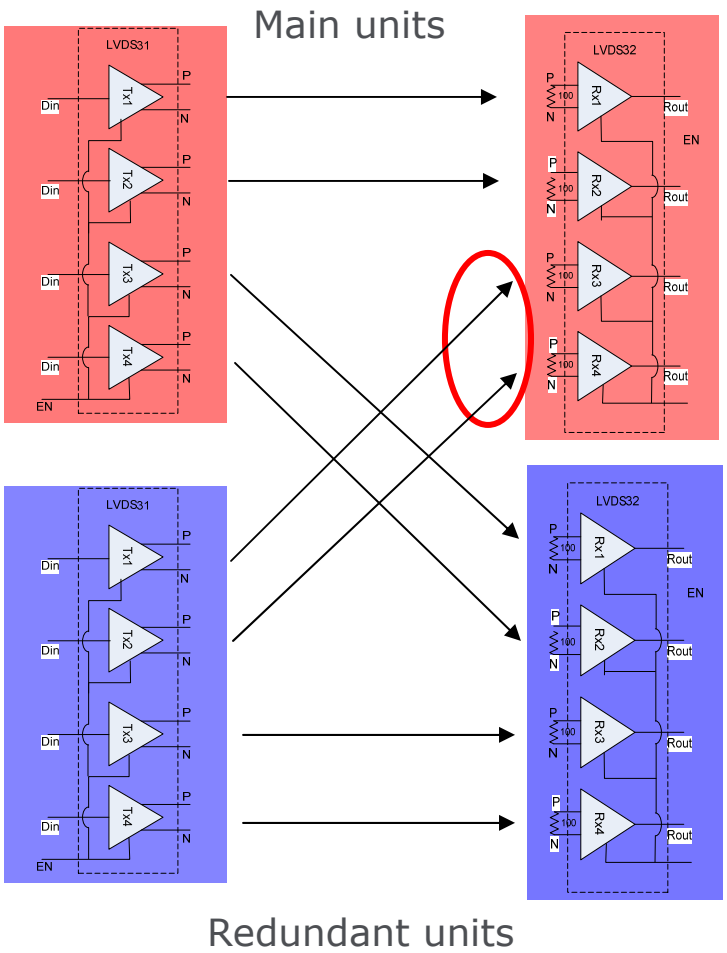

Un-driven receiver inputs may pick up noise causing spurious transitions on output (cross talk)

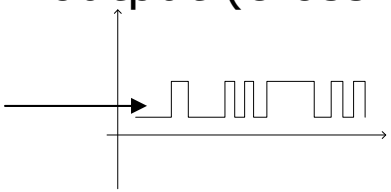

External failsafe network or failsafe circuit should always be used

ESA UNCLASSIFIED – For Official Use

What issues do we face with LVDS?
Common Mode Noise

Common Mode Noise i.e. voltage differences above 1V is a problem for most TIA/EIA 644 LVDS devices

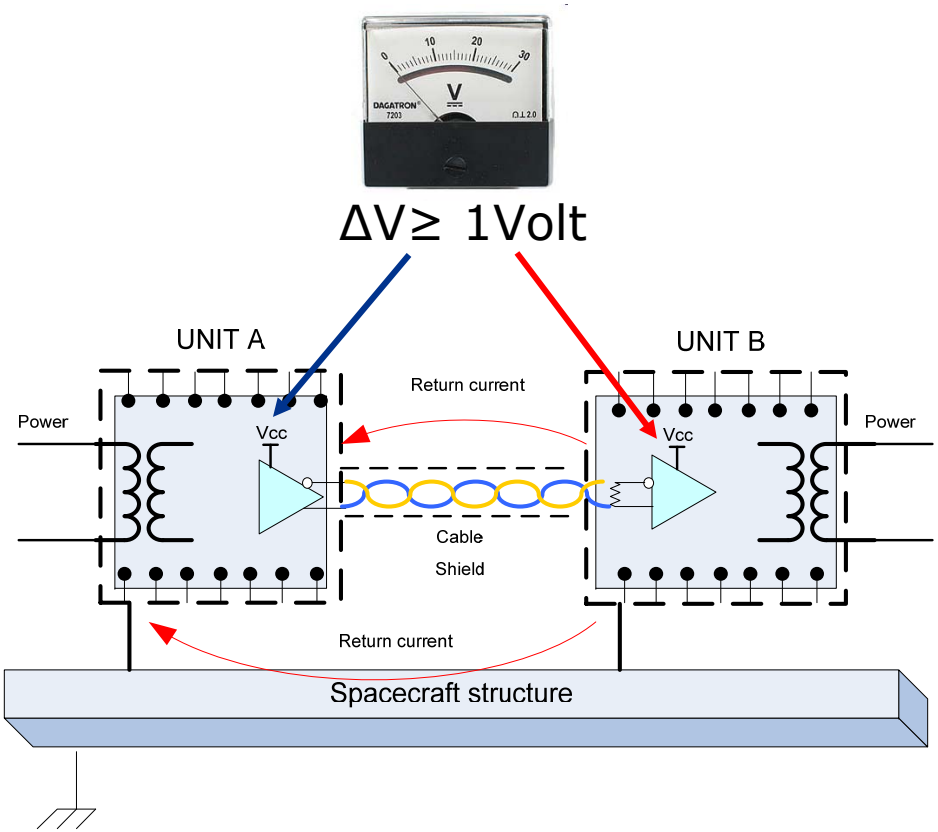

Common mode noise is caused by:

- **"Conducted" noise:** Significant impedance of return currents generates voltage difference.
- **Capacitive or inductive coupling:**

Signal lines too close to e.x power cables, switching of inductive loads,

- **EMI:**

Coupling from adjacent signal lines

- **ESD due to spacecraft charging:**

Sudden release of energy caused by surface charging.

ESA UNCLASSIFIED – For Official Use

What additional functions are needed?
Cold Sparing and higher absolute max rating

Cold Sparing capability is useful in applications e.g. where LVDS buffers are connected together for redundancy purposes

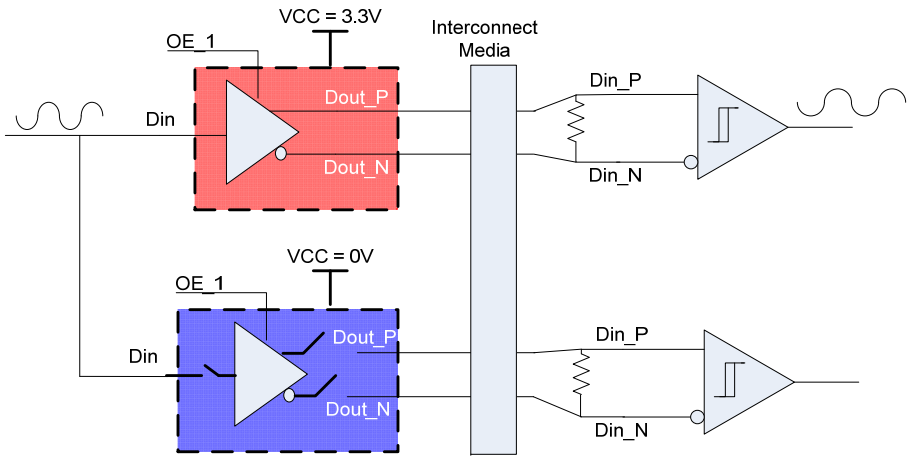

Cold Sparing Buffer represents high impedance when not powered

Increased absolute max rating of a LVDS device reduced risk of fault propagation

Typical max rating for a **3.3V** is typically around **4.0 – 4.5V**

European Space Agency

ESA UNCLASSIFIED – For Official Use

What additional functions are needed?
LVDS transceiver for SpaceWire

The available LVDS components for space does not always allow optimal solutions….

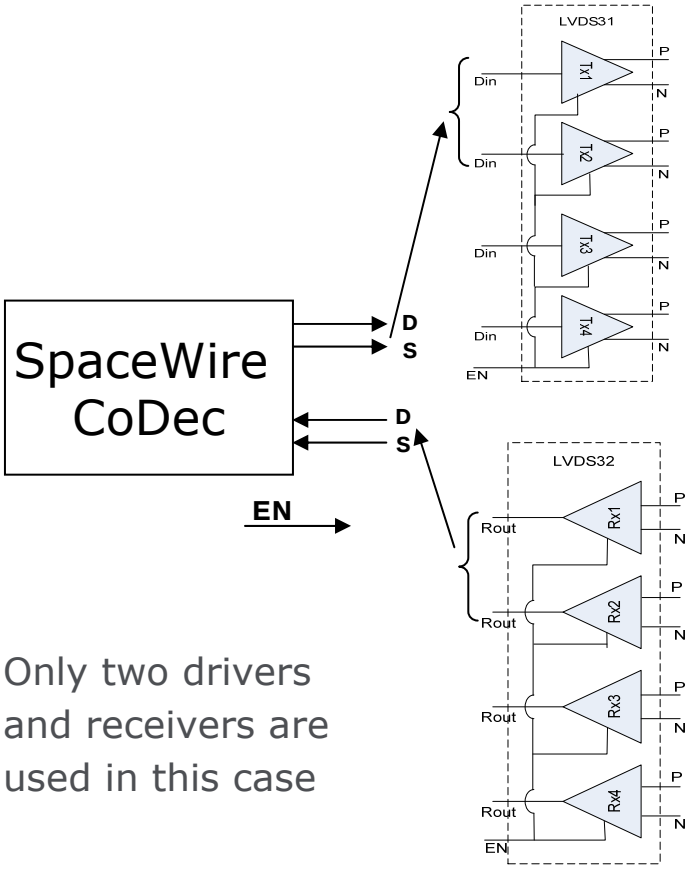

Only two drivers and receivers are used in this case

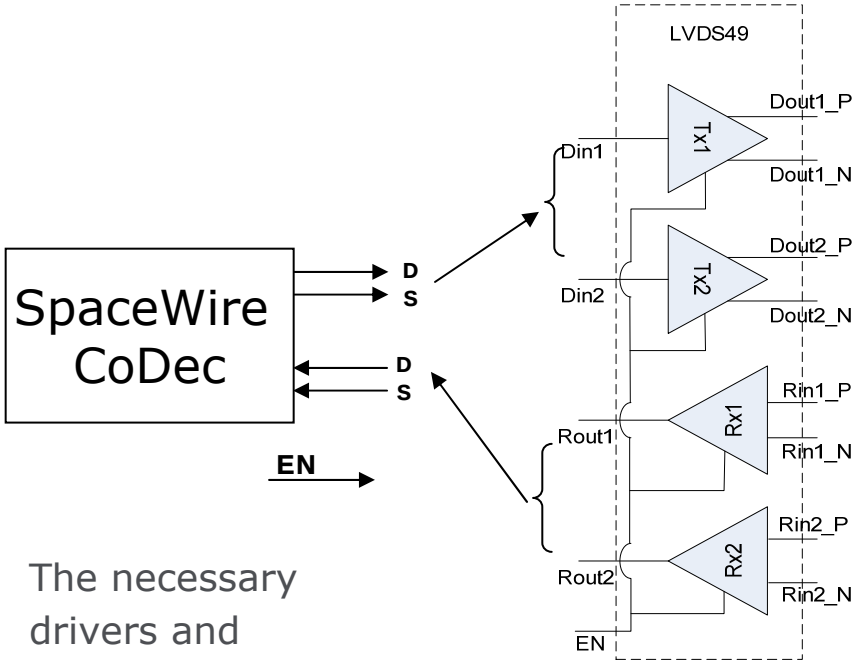

The necessary drivers and receivers in one package.

ESA UNCLASSIFIED – For Official Use

What additional functions are needed?
Reference signal distribution

- Not many Space Components on the marked fulfil this function for EIA/TIA 644 LVDS

- Low jitter and skew are key drivers

- Adequate fault tolerance is required

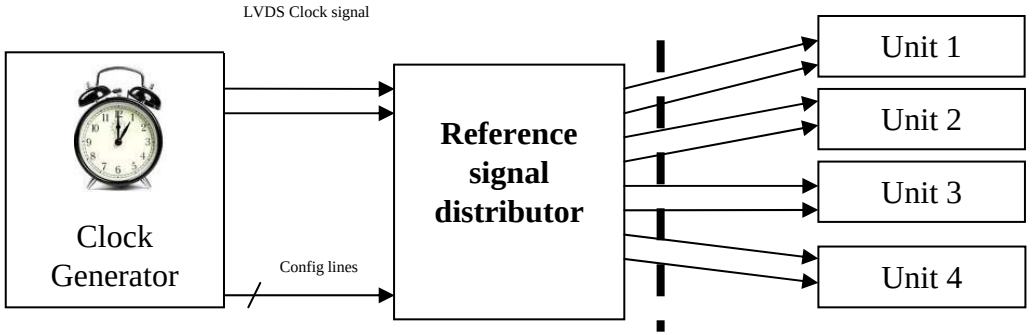

Function is ideal for;

- backplane and interconnect applications
- clock/data distribution
- Signal switching

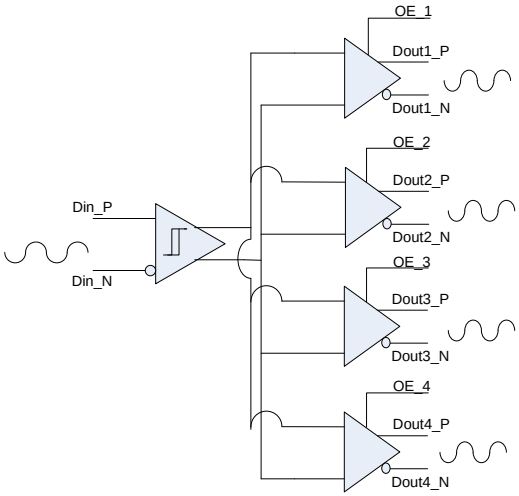

ESA UNCLASSIFIED – For Official Use

What additional functions are needed?

LVDS Signal repeating

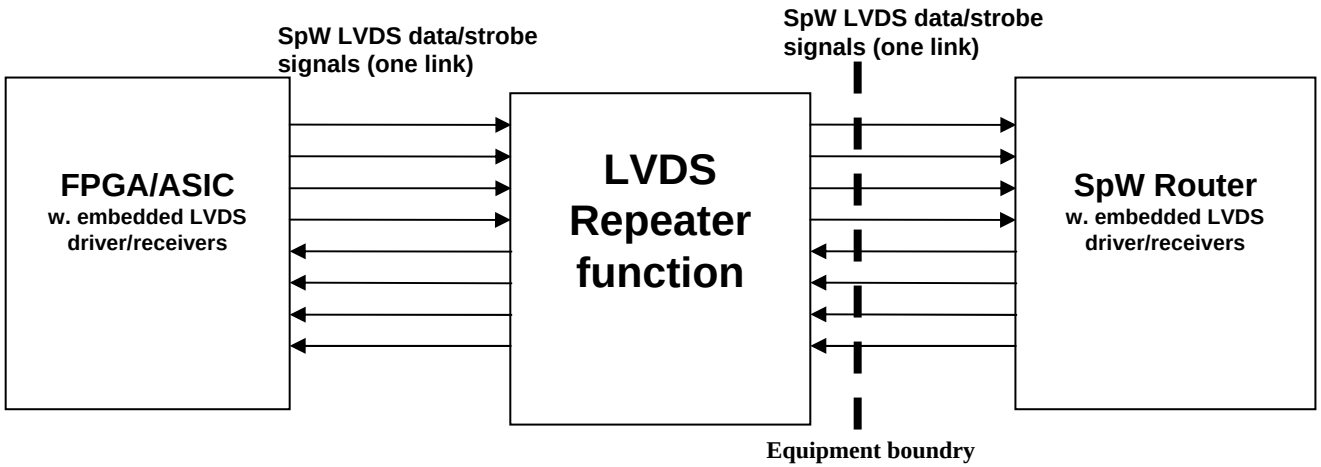

Some ASIC or FPGA might have ESD sensitive LVDS buffers

→ **Protection of costly ASIC/FPGA devices**

Some space FPGAs do not LVDS conform to ANSI/TIA/EIA 644

→ **Convert non compliant LVDS to ANSI EIA/TIA 644**

Signal losses of high speed LVDS signals can be adverse

→ **Ensure high speed signal over longer transmission paths**

European Space Agency

ESA UNCLASSIFIED – For Official Use

Why do we need to tackle these issues?
Obtain Safer LVDS implementations

- Harmonisation and adherence to **one common LVDS standard**
  - ✓ Reduce implementation problems
  - ✓ Guidelines for implementation and test can be specific

- Add additional features to **increase robustness**
  - ✓ Include built in fail-safe circuitry
  - ✓ Increase common mode voltage tolerance

- Ensure **acceptable ESD tolerance**

Less over-engineering

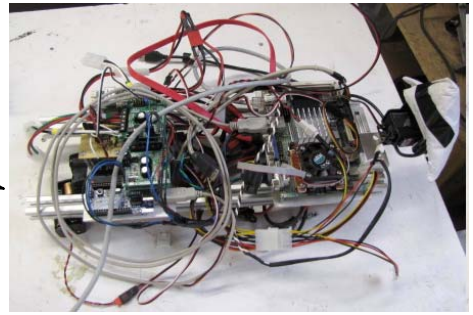

ESA UNCLASSIFIED – For Official Use

How can we tackle these issues?
European supplier of qualified components

Reduce component lead times

Secure availability of key devices

Better component traceability

Good Level of device application support

ESA UNCLASSIFIED – For Official Use

Do you agree with the following requirements?

ESA UNCLASSIFIED – For Official Use

Requirements for new LVDS devices

1. Adhere to the **ANSI TIA/EIA 644** standard

2. Support larger **common mode voltage** tolerance (e.g. SN65LVDS33)

3. **Higher maximum rating,**
    a. **Supply i.e. -0.5V - +4V**
    b. **LVTTL inputs i.e. -1V – +6V**
    c. **LVDS inputs i.e. -5V - +6V**
4. **Cold sparing**
    a. **Facilitate redundant system architectures**
    b. **low leakage current e.g. +/- <= 20uA**

5. **Integrated fail-safe circuit**

6. **Integrated termination resistor on LVDS receivers?**

ESA UNCLASSIFIED – For Official Use

Requirements for new LVDS devices

7. **Radiation tolerance**
    a. **latch-up threshold > 80 Mev-cm^2/mg**
    b. **Total dose > 300Krad**
8. Support **high speed** ASIC LVDS signals >= 200MHz
    ! Up to **300MHz** and beyond for ASIC LVDS buffers/receivers
9. **Facilitate SpaceWire implementations** i.e. have an optimal number of drivers and receivers in one package
10. **Buffer and distribute** low jitter clock signals over LVDS
11. **Repeater function for** LVDS signals
    1. Facilitate distribution of longer distances
    2. Facilitate ASIC **LVDS driver / receiver protection**
12. Availability of **commercial grade equivalent components**

European Space Agency

ESA UNCLASSIFIED – For Official Use

Requirements for specific devices
IDEAS…

1. **Transceiver** LVTTL to LVDS (2 x Tx and 2 x Rx)
2. **Repeater** 1 to 1, LVDS to LVDS (4X)
3. **Crossbar Switch**, 4x4 for redundancy switching
4. **Extended repeater** function 1 to 8, LVDS to LVDS (clock distribution)
5. Other devices?

European Space Agency

ESA UNCLASSIFIED – For Official Use

Thank you!

European Space Agency

ESA UNCLASSIFIED – For Official Use