RUAG

RUAG Space experience with LVDS interfaces

European LVDS Application Workshop

June 29th 2011

Hans Corin
RUAG Space AB
Göteborg, Sweden

Main items

- LVDS interface failure propagation
- Incompatibility between devices from different suppliers

LVDS interface failure propagation SpaceWire link overvoltage tolerance

RUAG

- LVDS supply: typically 3,3V ±5%
  plus ripple and transients ±10%
  ➔ voltage range 0V to +3,6V
- Thus, the emitted fault voltage may be from 0 to +3,6V
- Abs max rating for receiver says -0,3V to +3,9V (or 4,0V)

LVDS interface failure propagation SpaceWire link overvoltage tolerance

RUAG

- For UT54LVDS032LV & RHRLVDS32, SMD spec says +4,3V when a device is powered off but the UT54LVDS032LV data sheet says 4,0V
- The UT54LVDS032LV data sheet on the other hand is not fully clear on the tolerance when the circuit is powered
  - it does not differentiate the absolute maximum values for the LVDS lines from the "normal" CMOS lines and specifies a voltage of Vdd+0,3V as maximum.
- The STLVDS32B tolerates from -0,5V to +4,6V
- The AT7910 absolute maximum ratings for the LVDS interfaces are not stated, not in the data sheet nor in the Atmel generic data sheet for the MH1 process.
  - In the AT7910 manual there is a reference to an Atmel MH1 data sheet that seems to be obsolete as the link leads nowhere.
- **However, to avoid future discussions we should consider the -0,3V to +3,9V maximum tolerance figure as the range to use.**

LVDS interface failure propagation SpaceWire link overvoltage tolerance

Analysis, two equipments connected by a SpW link:

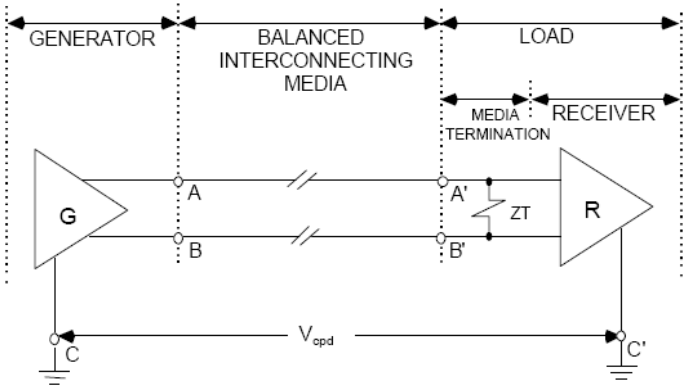

- TIA/EIA-644-A: **receiver** operating with input levels from 0V to 2,4V
- With **driver** output offset voltage (≈1,2V) and output differential voltage extremes (±0,4V)
  ➔ LVDS I/F common potential difference max ±0,8V (between equipments)
- **Fault voltage:** driver or receiver emits 0V or 3,6V,
  -0,3V to +3,9V **maximum tolerance,**
  the common potential difference of max ±0,3V is allowed between equipments to prevent failure propagation over a faulty SpaceWire link
- Solution 1: Maximum ±0,3V **has to be guaranteed** by the prime between equipments
  - Also during environmental tests as EMC (CS transients)
- Solution 2: Increased overvoltage tolerance range,
  for **both** drivers and receivers -1V to +4,6V (?)

Incompatibility between devices from different suppliers

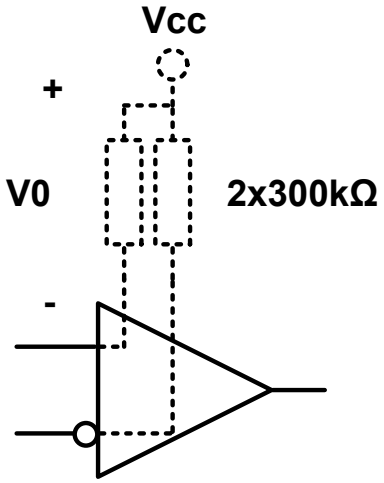

- Failsafe criteria for LVDS inputs, covering
  - tristated outputs
  - unpowered outputs
- Example: Texas LVDS have weak 300k pullups implemented at the inputs
- Failsafe function guaranteed when both inputs > 2,3V
- To be above 2,3V, current leakage has to be lower than (3V-2,3V)/300k = 2,3µA
- Current leakage from driver important

Incompatibility between devices from different suppliers

- Test with oscillating output:

- Easy to get oscillation with input current leakage above -2,2 µA
- Confirms the analysis!

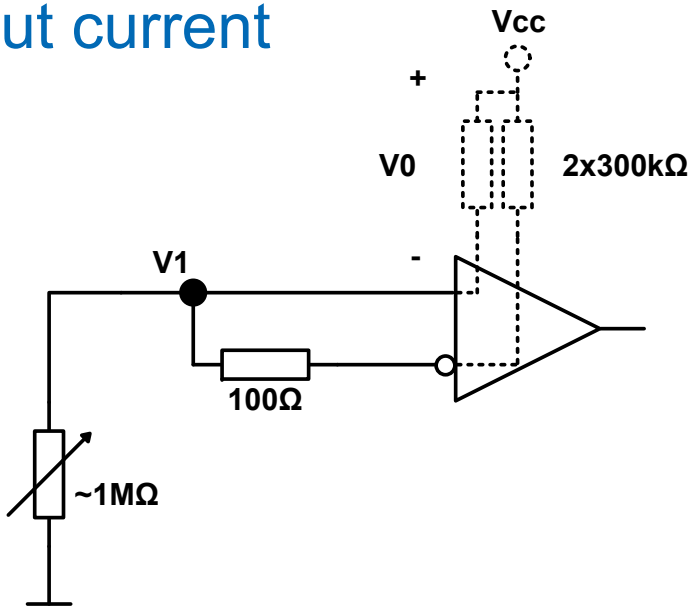

Incompatibility between devices from different suppliers

RUAG

- From SMD specification 5962-98651, driver fail-safe status when connected to SN55LVDS32-SP input:

Driver	Current leakage	
SN55LVDS31 (3.3V)	Power off output current $I_{O(OFF)} = \pm 4\mu A$ High impedance output current $I_{OZ} = \pm 1\mu A$	NOK (> 2.3μA) **OK** (< 2.3μA)
UT54LVDS031LV (3.3V)	Power-off leakage $I_{OFF} = \pm 20\mu A$ Output tri-state current $I_O = \pm 10\mu A$	NOK (> 2.3μA) NOK (> 2.3μA)
DS90LV031A (3.3V)	Power-off leakage $I_{OFF} = \pm 20\mu A$ Output tri-state current $I_O = \pm 10\mu A$	NOK (> 2.3μA) NOK (> 2.3μA)
STLVDS31 (3.3V)	Power-off leakage $I_{OFF} = \pm 20\mu A$ Output tri-state current $I_O = \pm 10\mu A$	NOK (> 2.3μA) NOK (> 2.3μA)
UT54LVDS031 (5V)	Power-off leakage $I_{OFF} = \pm 20\mu A$ Output tri-state current $I_O = \pm 10\mu A$	NOK (> 2.3μA) NOK (> 2.3μA)
UT54LVDSC031 (5V)	Power-off leakage $I_{OFF} = \pm 20\mu A$ Output tri-state current $I_O = \pm 10\mu A$	NOK (> 2.3μA) NOK (> 2.3μA)
DS90C031 (5V)	Power-off leakage $I_{OFF} = \pm 20\mu A$ Output tri-state current $I_O = \pm 10\mu A$	NOK (> 2.3μA) NOK (> 2.3μA)

Incompatibility between devices from different suppliers

RUAG

- Mix of drivers and recievers are not compatible by trusting only the LVDS SMD specification
- Current leakage from drivers are not well characterized
- For external LVDS receivers we have to know which driver is to be used from other equipments,
  - Analysis needed for each I/F wrt failsafe criteria
- Inter-compatibility between LVDS components essential

In the best of worlds - needs

RUAG

- True Cold Spare – with outputs leaking up to ±20µA
- Inter-compatibility between different manufacturers (without tailorization)
- Enhanced SMD specification correcting for real values
- 400Mbps receivers in space quality
- Sub nano skew (<100ps) between outputs and inputs
- Increased overvoltage tolerance range,
  for **both** drivers and receivers -1V to +4,6V (?)

Thanks for your attention!