Texas Instruments
LVDS Space Products

Ioannis Tsikouris-Willgers
Business Development Manager
ioannis@ti.com

TI Space Portfolio

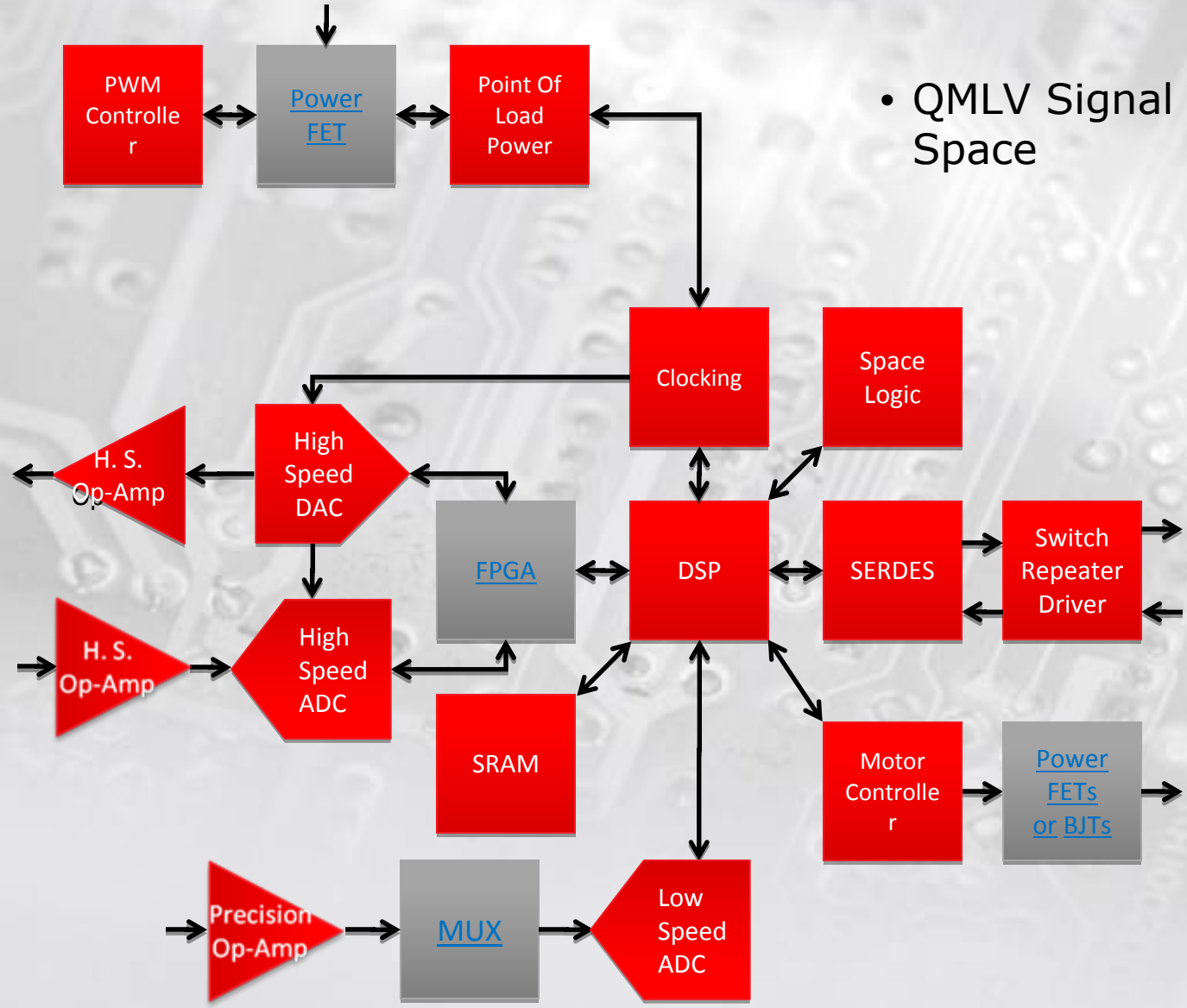

- QMLV Signal Chain Solutions for Space

TI's Commitment to Space

The HiRel Space Team: Investing to Grow!

- Dedicated Analog Design Team
- Systems Engineering & Applications Support
- Worldwide Sales Infrastructure
- Best-In-Class Delivery

Leading Edge Technology

- TI Owned QML Class V Certified Wafer Fabs
- Access To Latest Technology
- Innovative Packaging Technology

Market Expertise

- Compliant to Mil-PRF-38535
- TID, SEE Data Available
- Baseline Control
- Signal Chain Solutions

Advanced, Reliable, QMLV Worldwide Production

MIHO 5 & 6

- 200mm wafers
- CMOS
- Miho, Japan
- QMLV

TI Sherman SFAB

- 200mm wafers
- CMOS & BiCMOS
- Military HiRel
- Sherman, Texas
- QMLV

FFAB

- 200mm wafers
- CMOS and BiCMOS
- Freising, Germany
- QMLV

DMOS 4

- 200mm wafers
- CMOS
- Dallas, Texas
- 250, 180 & 130nm
- QMLV

DMOS 5

- 200mm wafers
- CMOS & BiCMOS
- Dallas, Texas
- 180, 130 nm
- QMLV

TI Technology

www.ti.com/radiation

www.ti.com/space

TEXAS INSTRUMENTS

Products | Applications | Design Support | Sample & Buy

TI Home > High Reliability > Space > Radiation Studies

High Reliability

Cross Reference Search | Technical Documents | How to Buy | Quality & Reliability Info

Space

- Processor Platforms
- Analog & Mixed-Signal
- Logic
- Radiation Studies

Radiation Studies

New Products and Radiation Data | Third Party Links

New Products and Radiation Data

Data Converters				
Parent	Description	Pins/Pkg	Order as DSCC SMD	Radiation Tolerance
DAC5675A-SP	14-Bit, 400 MSPS D-to-A Converter	52/HFG (CFP)	5962-0720401VXC	150kRad(Si)
DAC5670-SP	14-Bit 2.4 GS A Converter			
ADS5424-SP	14-Bit, 105 M to-D Convert			
ADS5444-SP	13-Bit, 250 M to-D Convert			
ADS5463-SP	12-Bit, 500 M to-D Convert			

Parent	Descripti
TLK2711-SP	2.5GB/s S Transceiv
SNV55LVDS31-SP	QUAD LVD TRANSMIT TIA/EIA-6
SNV55LVDS32-SP	QUAD LVD ANSI TIA/
SNV55LVDS33-SP	Quad LVD with -4 to

Space Guide

Get an overview of TI HiRel's extensive QML Class V product family.

› more

TEXAS INSTRUMENTS

Samples & Purchase Cart | Contact Us | TI Worldwide: United States | my.TI Login

Products | Applications | Design Support | Sample & Buy

All Searches | Search by Keyword | GO | Search by Part Number | GO

TI Home > High Reliability > Space

SHARE

High Reliability

Cross Reference Search | Technical Documents | How to Buy | Quality & Reliability Info

Space

- Processor Platforms
- Analog & Mixed-Signal
- Logic
- Radiation Studies

Space

About Space: Class V Space Flight / Satellite Products from TI

Radiation Tolerant Products

Radiation tolerant products are being introduced to the extensive line of TI's QML Class V family. See each product's page for the most up-to-date information on device availability. Texas Instruments has chosen to support the demanding nature of space applications through MIL-PRF-38535 QML Class V products.

We have an extensive portfolio of devices we could offer to the QML Class V class. If there is some function or technology TI offers that is not currently included in our QML Class V line, contact TI's Product Information Center so we can explore the possibilities of working with you on your new opportunities.

Click here to request a sample of Space product.

Additional Resources

Class V Orderables (Class_V_Orderables.pdf, 27 KB) [This file is no longer maintained. Please see Radiation Studies page for latest releases.] 08 Oct 2009

Space Level Product Inventory (Class_V_Inventory.pdf, 15 KB)

[redacted]

New Power Management and AC logic families

TI HiRel offers improved radiation performance on Unitrode power mangement and AC logic devices extending product applications into high temperature, medical, and aerospace applications.

› more

Space Guide

Get an overview of TI HiRel's extensive QML Class V product family.

TI LVDS Portfolio

SN55LVDS31-SP

Released

Quad LVDS Driver

Features

- Low-Voltage Differential Signaling With Typical Output Voltage of 350 mV and 100W Load
- 500 psec Output Voltage Rise and Fall Times
- Typical Propagation Delay Times of 1.7 nsec
- Operate from a Single 3.3V Supply
- 25 mW Typical Power per Driver at 200 MHz
- Driver at High Impedance when Disabled or V_{CC}=0
- Bus-Terminal ESD Protection Exceeds 8-kV
- Low-Voltage TTL (LVTTL) Logic Input Levels
- Temperature Range: -55°C to +125°C
- Available in 16-pin Ceramic DFP (W) Package

Benefits

- Designed for Use With Dual Differential Receiver SN55LVDS32-SP
- QML-V Qualified for Space Applications per MIL-PRF-38535
- Pin compatible and Interchangeable with Advanced Micro Device AM26LS31™
- Non ITAR
- Cold Sparing for Space and High Reliability Applications Requiring Redundancy

LVDS31 logic diagram (positive logic)

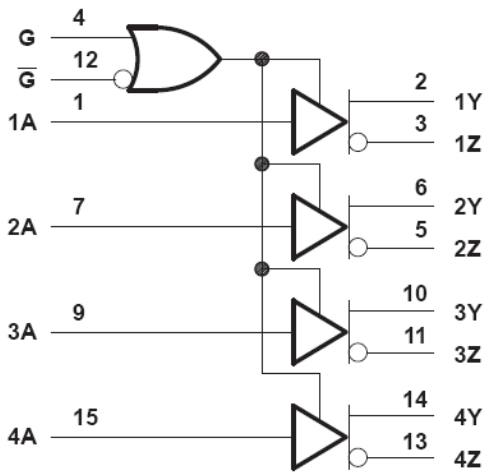

Applications

- Satellite
- Radar and Guidance Systems
- Defense Electronics

Rad Performance

- TID = 100kRad(Si)

Texas Instruments

SN55LVDS32-SP

Released

Quad LVDS Receiver

Features

- Designed for Signal Rates of up to 100 Mbps
- Differential Input Thresholds ±100 mV Max
- Typical Propagation Delay Time of 2.1 nsec
- Power Dissipation 60 mW Typical Per Receiver at Maximum Data Rate
- Open-Circuit Fail-Safe
- Operate from a Single 3.3V Supply
- Bus-Terminal ESD Protection Exceeds 8-kV
- Low-Voltage TTL (LVTTL) Logic Output Levels
- Temperature Range: -55°C to +125°C
- Available in 16-pin Ceramic DFP (W) Package

Benefits

- QML-V Qualified for Space Applications per MIL-PRF-38535
- Pin compatible and Interchangeable with Advanced Micro Device AM26LS32™
- Non ITAR
- Cold Sparing for Space and High Reliability Applications Requiring Redundancy

Applications

- Satellite
- Radar and Guidance Systems
- Defense Electronics

Rad Performance

- TID = 100kRad(Si)

LVDS32 logic diagram
(positive logic)

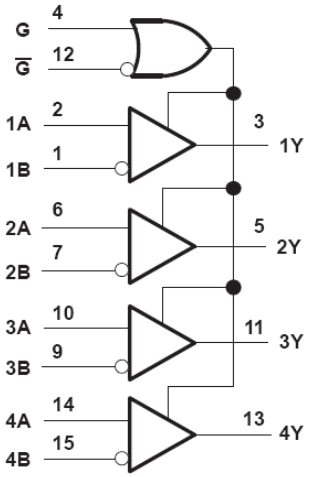

SN55LVDS33-SP

Released

Quad LVDS Receiver With –4 to +5V Common-Mode Input Range

Features

- Industries Highest Input Common-Mode Range
- 400-Mbps Signaling Rate and 200-Mxfr/s Data Transfer Rate
- Operates With a Single 3.3-V Supply
- Differential Input Thresholds <±50 mV With 50mV of Hysteresis Over Entire Common-Mode Input Voltage Range
- Complies With TIA/EIA-644 (LVDS)
- Active Failsafe Assures a High-Level Output With No Input
- Input Remains High-Impedance on Power Down
- 5V Tolerant TTL Inputs
- Temperature Range: -55°C to +125°C
- Available in 16-pin Ceramic DFP (W) Package

Benefits

- Capable of sensing small differential signals in presense of large common-mode noise
- Non ITAR
- QML-V Qualified
- Ordeable as SMD 5962-07248

Applications

- Satellites
- Radar and Guidance Systems
- Defense Electronics

Radiation Performance

- TID = 100kRad(Si)

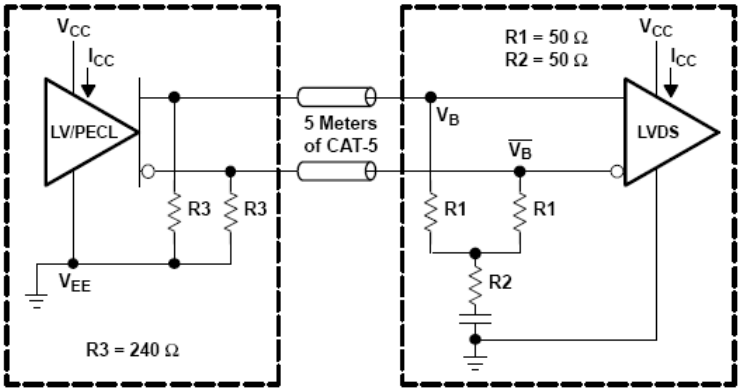

LVPECL or PECL to Remote Wide Common-Mode LVDS Receiver

TLK2711-SP

Released

Single 1.6 – 2.5 Gbps Transceiver

Features

- 1.6 to 2.5 Gbps Data Rate
- Common 16:1 Serializer/ De-Serializer
- LVTTL parallel side interface
- VML driver with internal termination on Rx
- Output Transmit Pre-Emphasis
- Loss-Of-Signal Detection Circuitry
- Built-in testability features
  - PRBS generation and verification
  - Internal Loop Back
- Temperature Range: -55°C to +125°C
- Available in 68-pin 1.6mm x 1.6mm Ceramic QFP (HFN) Package

Benefits

- Low Power Consumption of 390mW
- Ideal for GbE, Fibre-Channel, FireWire, Backplane Interface Between FPGA & Channel (Copper or Fiber) Applications
- Capable of driving Cable Applications
- Orderable as SMD 5962-0522101VXC

Applications

- Satellite
- Radar Systems
- Guidance Systems

Rad Performance

- TID = 50kRad(Si)

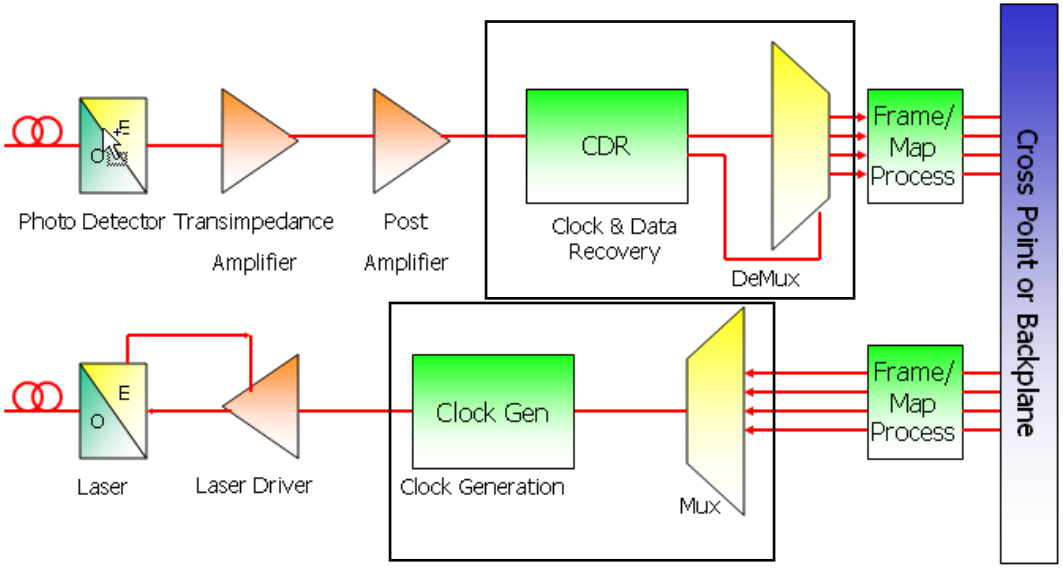

SN65LVCP22-SP

Development

1Gbps 2x2 LVDS Crosspoint Switch

Features

- 3.3V Supply Voltage
- 0-4V common mode range
- 1Gbps, 100ps rise and fall
- Low Peak to Peak Jitter, 105ps max
- Low Part to Part Skew, 100ps max
- Low Power, 200mW
- Temperature Range: -55°C to +125°C
- Available in 16-pin Ceramic FP (W) Package
- 2:2 buffering (repeating), 1:2 splitting, 2:1 multiplexing, 2x2 switching, and LVPECL/CML to LVDS level translation on each channel
- Supports Hot Plugging

Benefits

- Improved Signal Integrity
- Improved Noise Immunity
- Flow Though pin placement eases routing and skew control
- QML-V Qualified
- Samples available: 4Q11
- Release: 1Q12

Applications

- Non Blocking Circuit Switch
- High Speed Serial Network Switches/Routers
- Add/Drop Multiplexer
- Fault Tolerant Redundant Switching for Serial Backplanes

MUX table

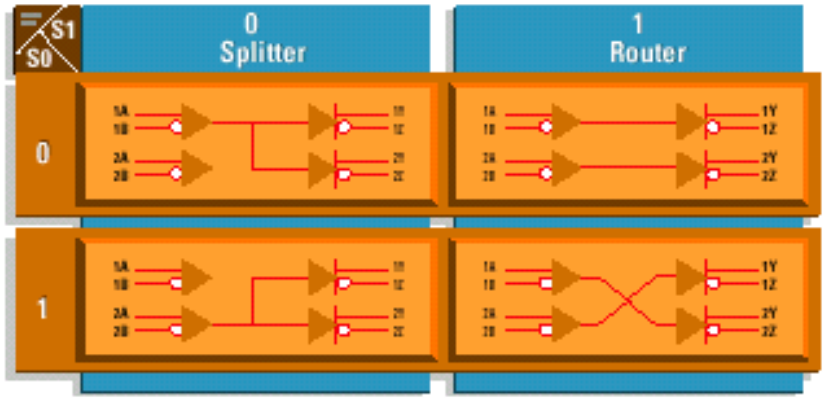

Rad Performance

- TID = 100kRad(Si)

TPS50601-SP

Development

6A Monolithic QMLV Point of Load DC-DC Converter

Features

- PV_{IN} = 1.6V to 7V
- Min Output Voltage to 0.9V
- Integrated Power MOSFETS
- 6A Output Current
- Synchronous operation
  - 100 kHz to 1.0 MHz Switching Frequency
- Power Good, Enable, Adjustable Slow-start, Current Limit
- Adjustable Under voltage Lockout
- Parallel operation 180° out of Φ with Sync pin
- Temperature Range: -55°C to +125°C
- Packaged in Thermally Enhanced 20-pin Ceramic Flatpack and Known-Good-Die (KGD) Packaged in Waffle Pak

Applications

- Satellite
- Radar and Guidance Systems
- Defense Electronics

Rad Performance

- TID = 100kRad(Si)
- SEL Immune @ LET > 85MeV

Benefits

- Start-up Inrush Current Limited
- Reduced External Components
- Easy On/Off Control
- Self-Protected from Fault Conditions
- When Switched Off Low Power Consumption
- Small with Good Thermal Performance
- Customers can use standard TI design SW
- ELDRS Free
- QML-V Qualified For Space Applications
- Cold Sparing for Space

SIMPLIFIED SCHEMATIC

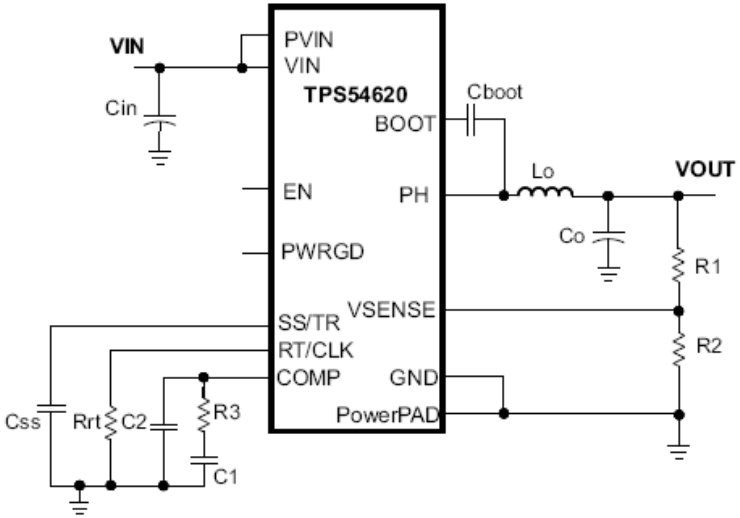

Texas Instruments

TI to acquire National Semiconductor

Combination to strengthen analog portfolio and customer support

- **What does this mean for customers?**
  - A single analog portfolio with unmatched breadth and depth
  - Sales/apps force larger than any in the industry for better face-to-face support
  - Manufacturing capacity to support your growth
- **Our commitment to a seamless, hassle-free transition for you**
  - No requalification of products
    - We will continue to run National's fabs
    - No obsolescence of parts
    - No part number changes
  - Product roadmaps continue as planned

Thank You !