SYDERAL

European LVDS Application Workshop

Problem areas and lessons learned when designing with LVDS

Projects using LVDS drivers and receivers at Syderal

- GAIEU-FEEU Gradiometer, GOCE mission
  1Mbps serial link
  LVDS driver and receiver: NI DS90C031W/ DS90C032W

- ACDM - Aladin, AEOLUS mission,
  clock distribution @ 48 MHz
  LVDS drivers: NI DS90C031W

- PDHU, GAIA mission
  SpaceWire/PacketWire links
  LVDS drivers and receivers: TI SN55LVDS31W/SN55LVDS32W

- ICM, Sentinel 1 mission
  SpaceWire links
  LVDS drivers and receivers: TI SN55LVDS31W/SN55LVDS32W

- MMFU, EarthCARE mission
  XTM link @ 37MHz
  LVDS driver: TI SN55LVDS31W 3.3V (interfaced to a 5V powered LVDS receiver)

Ground noise immunity

- Ground to ground potential limited to +/- 1V max

- ESD and common mode rejection requirements could be not achievable (NCR issued for ICM, Sentinel 1, TI LVDS)

Failure propagation

- LVDS drivers and receivers may not have the same power supply voltage

- Avoiding failure propagation between driver and receiver (when the power supply voltage level is not the same, e.g. 3.3V and 5V) may require complex design solutions

Disabled driver

- Undetermined output state of the receiver when the driver output is in high impedance (NI LVDS)

- Specific cases make it difficult to discriminate normal operating conditions w.r.t. signal is commutating on noise in high impedance driver condition (e.g. clock distribution between different units)

Signal measurements, e.g. rise and fall time

- Output to input electromagnetic coupling due to probe perturbation could affect the signal waveform significantly

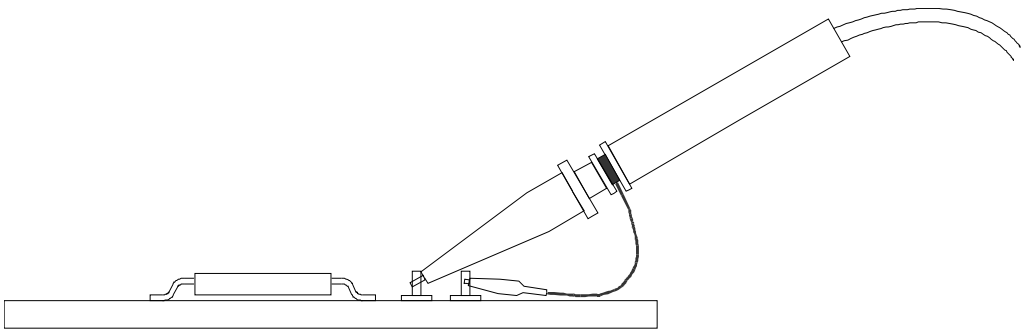

Signal measurements, e.g. rise and fall time

- Output to input electromagnetic coupling due to probe perturbation could affect the signal waveform significantly

- Counter measures:
  - Use low capacitance active probes,
  - Use differential active probes
  - Design with back side test points
  - A custom differential active probe based on an LVDS receiver has been used at Syderal with good results

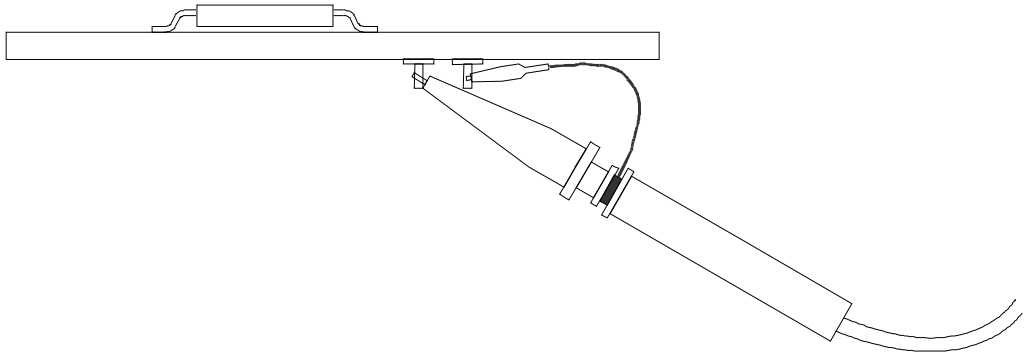

Improvements

- Wide ground to ground potential range
- -0.5 to 6V cold sparing I/O pins range
- Provide for jitter characterization of drivers and receivers
- Quad and dual drivers/receivers packages
- Qualified serializer/de-serializer
- Programmable/adaptive differential current