LVDS Product Family

Aeroflex Colorado Springs

Jennifer Larsen
larsen@aeroflex.com

June 2011

Aeroflex LVDS Agenda

- Assured supply of LVDS and LVDM devices
- Designed in Missions
  - Past
  - Future
- Device Testing
  - Compatibility with ANSI/TIA/EIA-644 (3.5mA drive) and ANSI/TIA/EIA-899 (10mA drive)
  - Radiation Testing
  - Overvoltage
  - Jitter
  - Power Dissipation
  - Failure Modes
- LVDS Products and Roadmap
  - Drivers and Receivers
  - Serializer and Deserializer
  - Repeater and Crosspoint Switch
  - ASIC Options
- Summary

Aeroflex LVDS Value Proposition

- Aeroflex Colorado Springs provides LVDS devices that are compatible with ANSI/TIA/EIA-644 (3.5mA drive) and ANSI/TIA/EIA-899 (10mA drive)
- The differential aspect of LVDS allows systems to run at high data rates, low switching power, high noise immunity, and common mode range
  - Low power consumption
    - Virtually flat versus frequency
    - 10% of the power required for ECL
  - Low noise
    - Constant current source outputs have low demand on power/ground
    - Differential fields tend to couple, reducing EMI
    - Noise on differential lines is rejected by the receiver as common mode
  - High speed
    - 0.6μm CMOS provides a path to > 155Mbps (5.0V Devices)
    - 0.25μm CMOS provides a path to > 400Mbps (3.3V Devices)
    - 130nm CMOS for future products supports > 1250Mbps (2.5V and 1.2V Devices)
  - Cold Sparing
    - VDD = 0V, Voltage can be applied to inputs and outputs
    - I/O remain in a high impedance state (> 1MΩ)
    - Allows for redundant/spare devices to be on the bus without drawing additional power

Missions Past and Present

- **Current LVDS offerings are designed in on over 90+ programs**
- **LVDS is used to transmit and receive hundreds of megabits per second over differential media using a low voltage signal swing**
- **Ideal for applications where power is limited**
- **Past missions include:**
  - CONTOUR (Comet Nucleus Tour)
  - OPAL (Orbiting Picosat Automatic Launcher)
  - WGS (Wideband Global SATCOM)
  - MMS (MAGNETOSPHERIC MULTISCALE)
  - *STEREO* (Solar Terrestrial Relations Observatory)
  - *GLAST (*Gamma-Ray Large Area Space Telescope)
  - LRO (Lunar Reconnaissance Orbiter)
  - MISSE7 (*Materials* International *Space* Station Experiment-7)
  - JUNO (Jupiter Uranus Neptune Outreach)
- **Future programs:**
  - JWST (James Webb Space Telescope)
  - GPSIII (Global Positioning System)
  - RBSP (Radiation Belt Storm Probes)
  - MSL (Mars Science Laboratory)

LVDS Device Testing

- Both EIA/TIA-644 and EIA/TIA-899 are electrical signaling standards and do not define a protocol
- Aeroflex Colorado Springs tests all LVDS and LVDM devices to ensure electrical compatibility with the corresponding ANSI/EIA/TIA standard
- Following Test loads defined in the standards DC and AC parameters are tested on the ATE
  - Some parameters are guaranteed by characterization
    - Driver: IOS, ICCL, tR, and tF
    - Receiver: VTH/VTL, IOS, ICCL, tR, and tF
  - Further Characterizations performed based on demand.
    - Jitter, Overstress, Power Sequencing, Error Conditions, etc.
  - Each new wafer lot is Characterized to ensure LVDS/LVDM parameters are met
  - Many application notes available detailing normal and error condition use

Testing: Radiation Performance

- Aeroflex LVDS Devices are all RadHard-by-Design
  - All LVDS/LVDM devices operate in radiation environments
- Single Event testing
  - SEL – Single Event Latchup immune to 100 MeV-cm²/mg
    - MAX VDD and Temperature, worst case conditions
  - SEU – Single Event Upset
    - MIN VDD and Room Temperature, worst case conditions
  - SEE test reports are available upon request
- TID
  - Test according to MIL-STD-883 method 1019
    - MAX VDD and Room Temperature, worst case conditions
- ELDRS
  - Products 100% CMOS
    - ELDRS effects do not apply
  - To confirm no ELDRS effect on LVDS one device was tested

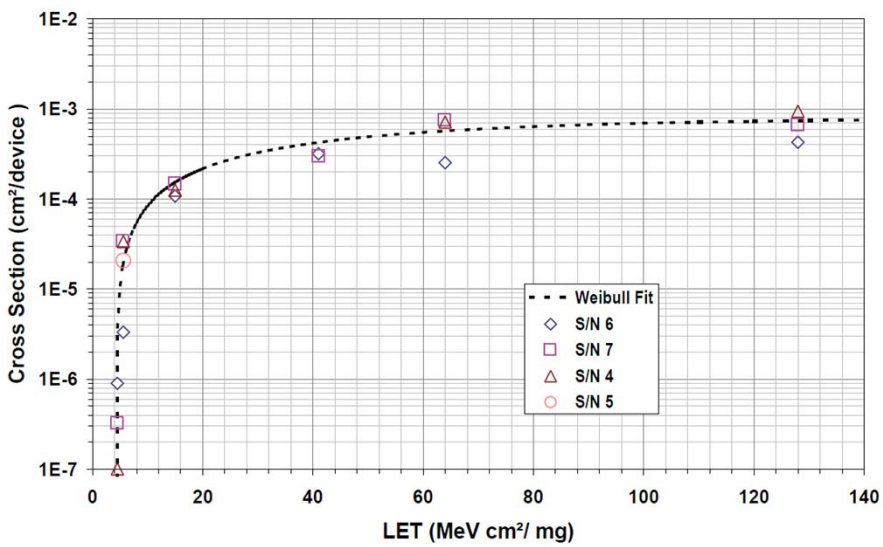

Testing: Hypothetical Fault Scenario

- It has been suggested that Low Voltage Differential Signaling drivers do not contain current sources
  - Aeroflex Colorado Springs LVDS Drivers contain constant current sources
- Also suggested is that if LVDS drivers contain current sources the output common mode level could not be controlled
  - Current source is generated based on a reference voltage that have little variation with respect to supply voltage
- There exists a probability of catastrophic occurring on LVDS devices that will damage primary and redundant devices the LVDS network
  - Experiments run to demonstrate the probability of fault propagating through system are low

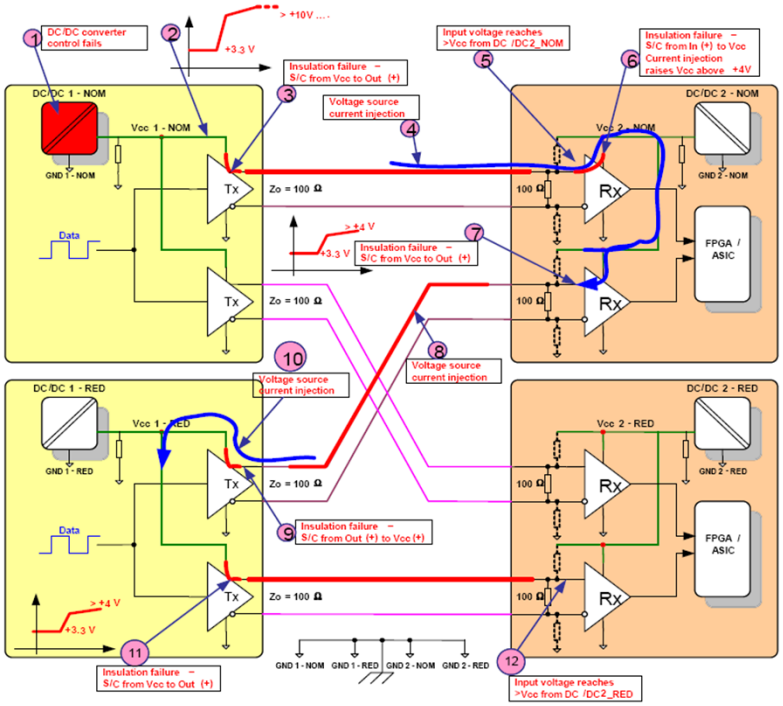

Testing: Power Dissipation

- Data collected for more detailed power analysis
- Max Loaded Supply currents listed in Datasheet and SMD are used for WCA, typical power dissipation is required
- Data collected on all LVDS Driver and Receiver Devices
- Provides system designer with all data and equations needed to calculate typical power based on specific operational parameters
  - Variations due to Supply Voltage (VDD)
  - Variation due to Temperature
  - Variations due to operational frequency

Total Driver Power (P_{TOTALD}):

$$P_{TOTALD} = (P_{STD} + (N_{SWDP} * P_{DYND})) = (SIDD * V_{DD}) + (N_{SWDP}[(C_{PD}(V_{DD}{}^2 * f)) + (C_L(V_{DD} * V_{OD}) * f)])$$

Total Receiver Power (P_{TOTALR}):

$$P_{TOTALR} = P_{STR} + (N_O(P_{DYNR} + P_{RLOAD}))$$

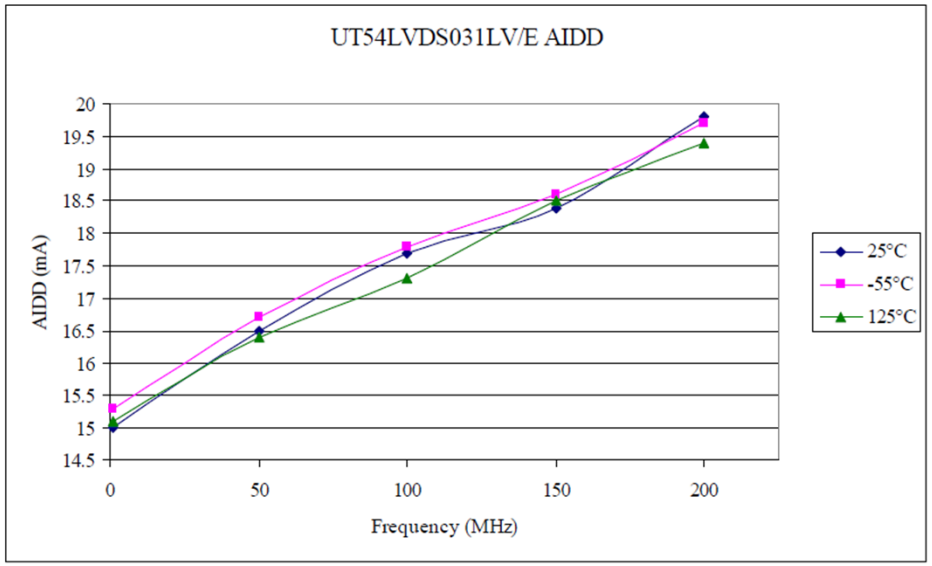

Figure 2. UT54LVDS031LV/E Active current vs. Frequency

LVDS Product Offerings and Roadmap

- Since 1995 Aeroflex Colorado Springs has been developing LVDS devices targeted for use in applications requiring radiation-hardened solutions for transferring data at data rates in excess of one Gbps
- Based on customer demand the LVDS product family has expanded to include 13 products
- Future products are slated for production in the coming years
  - Expanding 3.5mA Driver family to support SpW applications
  - Increasing data throughput capabilities
  - Increasing LVDS lanes (wider busses)
  - Expanding supply voltage options 5.0V, 3.3V, 2.5V, 1.8V
  - Smaller Packages
  - Cold Sparing
  - Increased ESD Performance
  - RadHard-by-Design

Driver and Receiver Products

Part Number	Type	Cold Spare	Flatpack	Total Dose	DSCC SMD
UT54LVDS031	5.0V Quad LVDS Driver		16	300 krad(Si) and 1Mrad(Si)	5962-95833
UT54LVDS032	5.0V Quad LVDS Receiver		16	300 krad(Si) and 1Mrad(Si)	5962-95834
UT54LVDSC031	5.0V Quad LVDS Driver	■	16	300 krad(Si)	5962-95833
UT54LVDSC032	5.0V Quad LVDS Receiver	■	16	300 krad(Si)	5962-95834
UT54LVDS031LV/E	3.3V Quad LVDS Driver	■	16	300 krad(Si) and 1Mrad(Si)	5962-98651
UT54LVDS032LV/E	3.3V Quad LVDS Receiver	■	16	300 krad(Si) and 1Mrad(Si)	5962-98652
UT54LVDS032LVT	3.3V Quad LVDS Receiver with Integrated RT	■	16	300 krad(Si) and 1Mrad(Si)	5962-04201
UT54LVDM031LV	3.3V Quad LVDM Driver	■	16	300 krad(Si) and 1Mrad(Si)	5962-06201
UT54LVDM055LV	3.3V LVDM Dual Driver/Receiver	■	18	300 krad(Si) and 1Mrad(Si)	5962-06202

- **>155.5 Mbps (77.7 MHz) switching rates (5.0V)**
- **>400 Mbps (200 MHz) switching rates (3.3V)**
- **+340mV nominal differential signaling**
- **TTL compatible inputs**
- **Drive long cable hauls using low power**

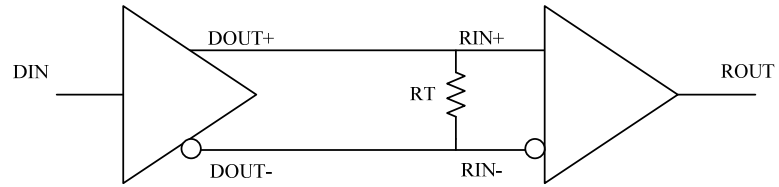

Serializer and Deserializer Products

Part Number	Type	Cold Spare	Flatpack	Total Dose (rad(Si))	DSCC SMD
UT54LVDS217	3.3V LVDS Serializer	■	48	300 krad(Si) and 1Mrad(Si)	5962-01534
UT54LVDS218	3.3V LVDS Deserializer	■	48	300 krad(Si) and 1Mrad(Si)	5962-01535

- **15 to 75 MHz shift clock support**
- **UT54LVDS217 converts 21 bits of CMOS data into three LVDS data streams**
  - **A phase-locked transmit clock is transmitted in parallel with the data**
  - **Each clock cycle, 21 bits of input data are sampled and transmitted**

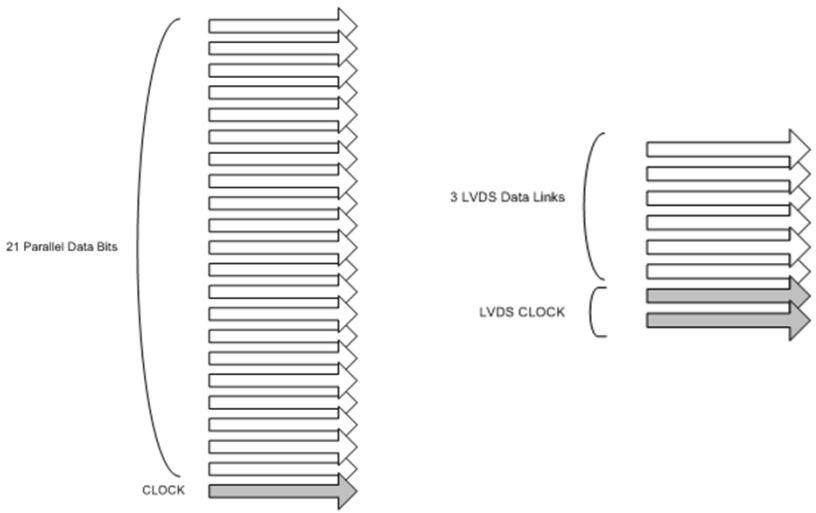

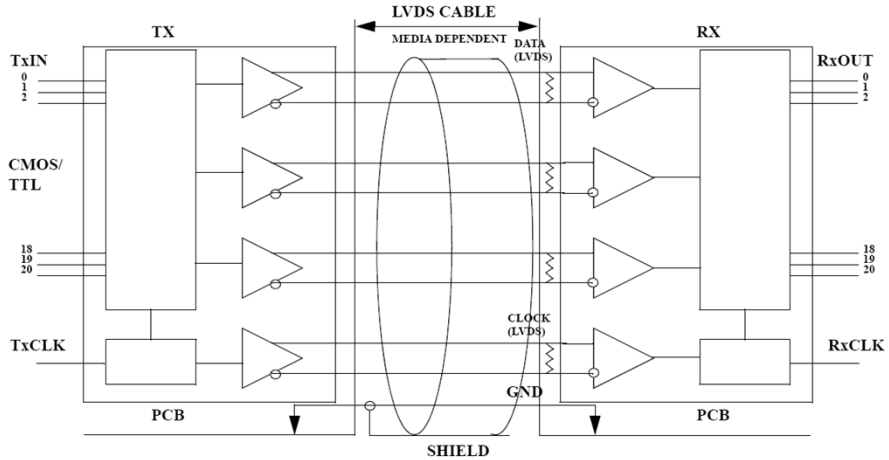

Repeater and Crosspoint Switch Products

Part Number	Type	Cold Spare	Flatpack	Total Dose (rad(Si))	DSCC SMD
UT54LVDM328	3.3V Octal LVDM Bus LVDS Repeater	■	48	300 krad(Si) and 1Mrad(Si)	5962-01536
UT54LVDM228	3.3V Quad 2x2 LVDS Crosspoint Switch	■	64	300 krad(Si) and 1Mrad(Si)	5962-01537

- **>400 Mbps (200 MHz) switching rates**
- **Cold Sparing on all pins**
- **10mA Constant Current Drivers**
- **Change data route**
- **Extend the length LVDS data is transmitted**

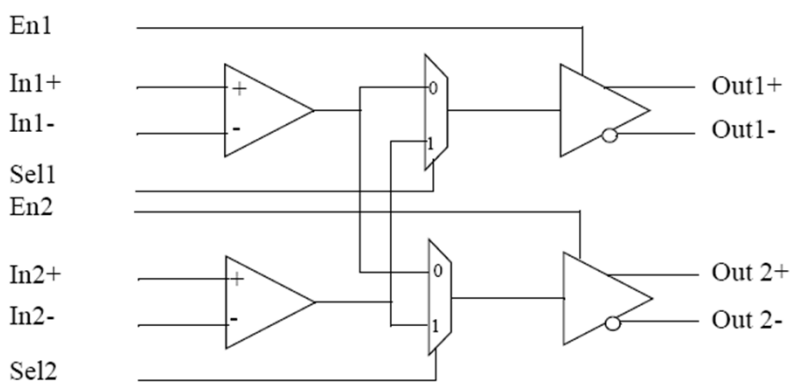

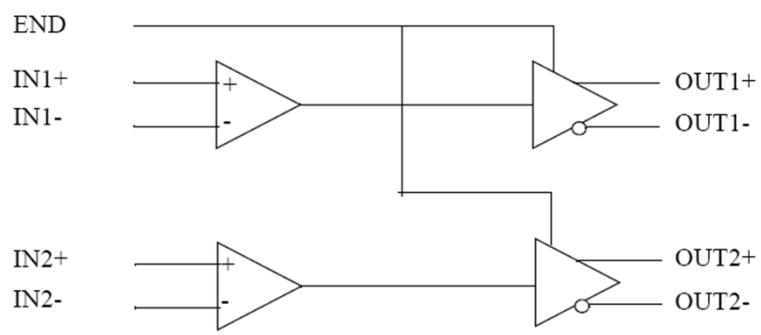

ASIC LVDS Technologies

	UT0.25µHBD	UT130nHBD	UT90nHBD
Feature Size (m)	0.25µ	130n	90n
Metal Layers	5	8	9
Gate Array / Std Cell	Std Cell	Std Cell	Std Cell
Max Gates Complexity	3M	15M	30M
Gate Density / mm²	13k	86k	212k
User I/O Pad Count	688	1248	1248
I/O Supply Voltage	3.3, 2.5, 1.8V	3.3, 2.5, 1.8V	2.5, 1.8V
LVDS Drv/Rcvr I/O	3.3V QML V Qualified 200-400Mbps	3.3V Fully Compliant, 400Mbps 2.5V In Development 400-800Mbps	2.5V In Development 400-1400Mbps 1.8V Considered
Core Supply Voltage	2.5V 10%	1.2V 0.1V	1.0V 0.1V
Power Consumption (nW/Gate-MHz)	40 @ 2.5V	3 @ 1.2V	0.2 @ 1.0V
NAND2 typ. Prop. Delay (ps)	150 @ 2.5V	50 @ 1.2V	15 @ 1.0V
Functional TID (rads(Si))	100k-1M @ 3.3V	100k-300k@ 3.3V	100k-1M @ 2.5V
Latch up (MeV/mg-cm²)	>110 @ 125 C	>115 @ 125 C	>120 @ 125 C
SEU Immunity - FF (err/bit-day) - SRAM	$< 1.2 \times 10^{-12}$ $< 2.7 \times 10^{-9}$	$< 5.4 \times 10^{-11}$ $< 8.0 \times 10^{-10}$	$< 6.0 \times 10^{-12}$ $< 5.0 \times 10^{-11}$
Library Availability	Now	Now	Now
Library Qualification	2004	2011	2013

Aeroflex LVDS Summary

- Application notes available
  - Failure Conditions
  - Timing Analysis
  - ESD
  - Power Dissipation
  - Power Sequencing
  - Receiver Skew Margin
- Expanding product use information for customers
  - Non standard applications
- Assured Supply
- High data rates
  - Current: >200MHz
  - Future > 1GHz
- Very robust processes
- Many existing and new missions implement Aeroflex LVDS/LVDM data busses
  - >90 Programs use Aeroflex Colorado Springs LVDS/LVDM devices
- Evaluation boards available

References

- Telecommunications industry Association, "Electrical Characteristics of Low Voltage Differential Signaling (LVDS) Interface Circuits ANSI/TIA/EIA-644", January 30, 2001.
- Telecommunications industry Association, "Electrical Characteristics of Multipoint-Low-Voltage Differential Signaling (M-LVDS) Interface Circuits for Multipoint Data interchange ANSI/TIA/EIA-899", March 2002.
- IEEE P1355, "Standard for Heterogeneous InterConnect (HIC) IEEE 1355-1995", Conference Title, Location, June 12, 1996.
- Aeroflex Colorado Springs, Various LVDS/LVDM/SpW datasheets, Colorado Springs, Colorado.
- Aeroflex Colorado Springs, "Theory of Operation and VDD Fault Scenario Application Note", Colorado Springs, Colorado, March 2010.
- Aeroflex Colorado Springs, "Typical Propagation Delays", Colorado Springs, Colorado, March 2011.
- Aeroflex Colorado Springs, "LVDS Family ESD Table", Colorado Springs, Colorado, May 2010.
- Aeroflex Colorado Springs, "Power Dissipation: LVDS Driver/Receiver Family", Colorado Springs, Colorado, September 2000.